SECTION C

ACCESSORIES
ALL SERIES

CONTENTS

Division	Subject	Paragraph
I	TROUBLE DIAGNOSIS: (Not Applicable)	-
II	DESCRIPTION AND OPERATION: (Not Applicable)	-
III	ADJUSTMENTS AND MINOR SERVICE: (Not Applicable)	-
IV	REMOVAL AND INSTALLATION: Refer to Illustrations	-
V	OVERHAUL AND MAJOR SERVICE: (Not Applicable)	-
VI	SPECIFICATIONS: (Not Applicable)	-

INDEX OF ILLUSTRATIONS

Figure	Caption
150-1	Guide-Matic Schematic
150-2	45-46-48-49000 Series Four Note Horn
150-3	Cassette Tape Player Installation - All Series
150-4	Utility Light Installation - All Series
150-5	Engine Block Heater - 43-44000 - 350 Engine
150-6	Engine Block Heater - 45000 - 350 & 455 Engines
150-7	Trailer Hitch Assembly - Sportwagon
150-8	Trailer Hitch Assembly - Skylark less Sportwagon
150-9	Trailer Hitch Assembly - Estate Wagon
150-10	Trailer Hitch Assembly - LeSabre and Centurion
150-11	Trailer Hitch Assembly - Electra
150-12	Trailer Hitch Assembly - Riviera
150-13	Trailer Harness Assembly - Sportwagon
150-14	Trailer Harness Assembly - Skylark less Sportwagon
150-15	Trailer Harness Assembly - Estate Wagon
150-16	Trailer Harness Assembly - LeSabre, Centurion, Electra & Riviera
150-17	Rear Window Defogger - Skylark less Sportwagon
150-18	Rear Window Defogger - LeSabre, Centurion & Electra less "Estate Wagon"
150-19	Rear Window Defogger - Riviera
150-20	Typical Fender Mount Mirror Installation
150-21	Typical CB Radio Installation
150-22	Typical CB Cable Routing
150-23	Ski Carrier to Luggage Carrier Installation
140-24	Roof Luggage Carrier Installation - Sportwagon and Estate Wagon
150-25	Typical Compass Installation
150-26	Typical Electric Trunk Release Switch Installation
150-27	Typical Electric Trunk Release Wire Routing and Latch Installation
150-28	Decimal Equivalent Chart
150-29	Decimal Equivalents and Tap Drill Size Chart

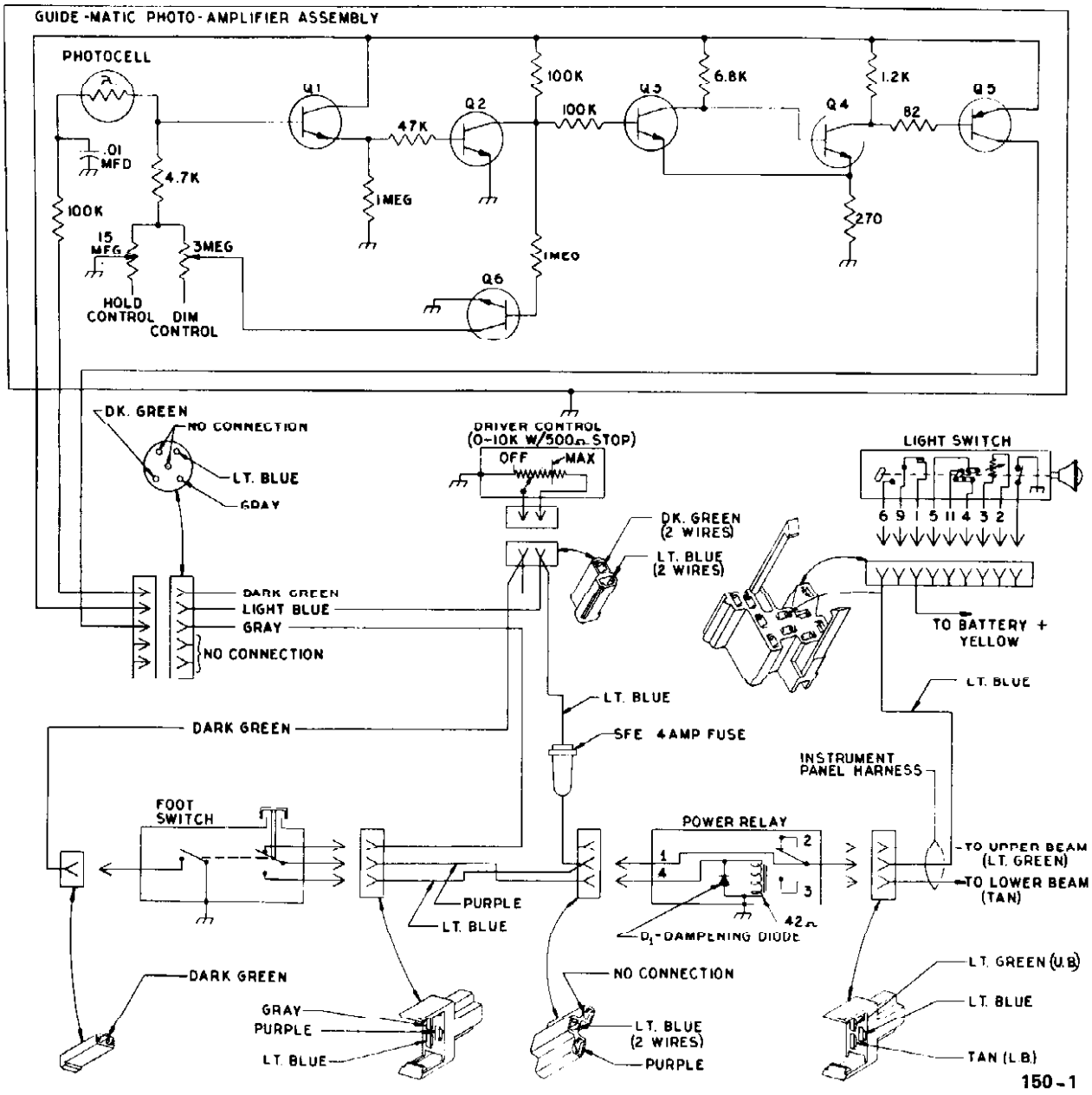

Figure 150-1 Guide Matic Schematic

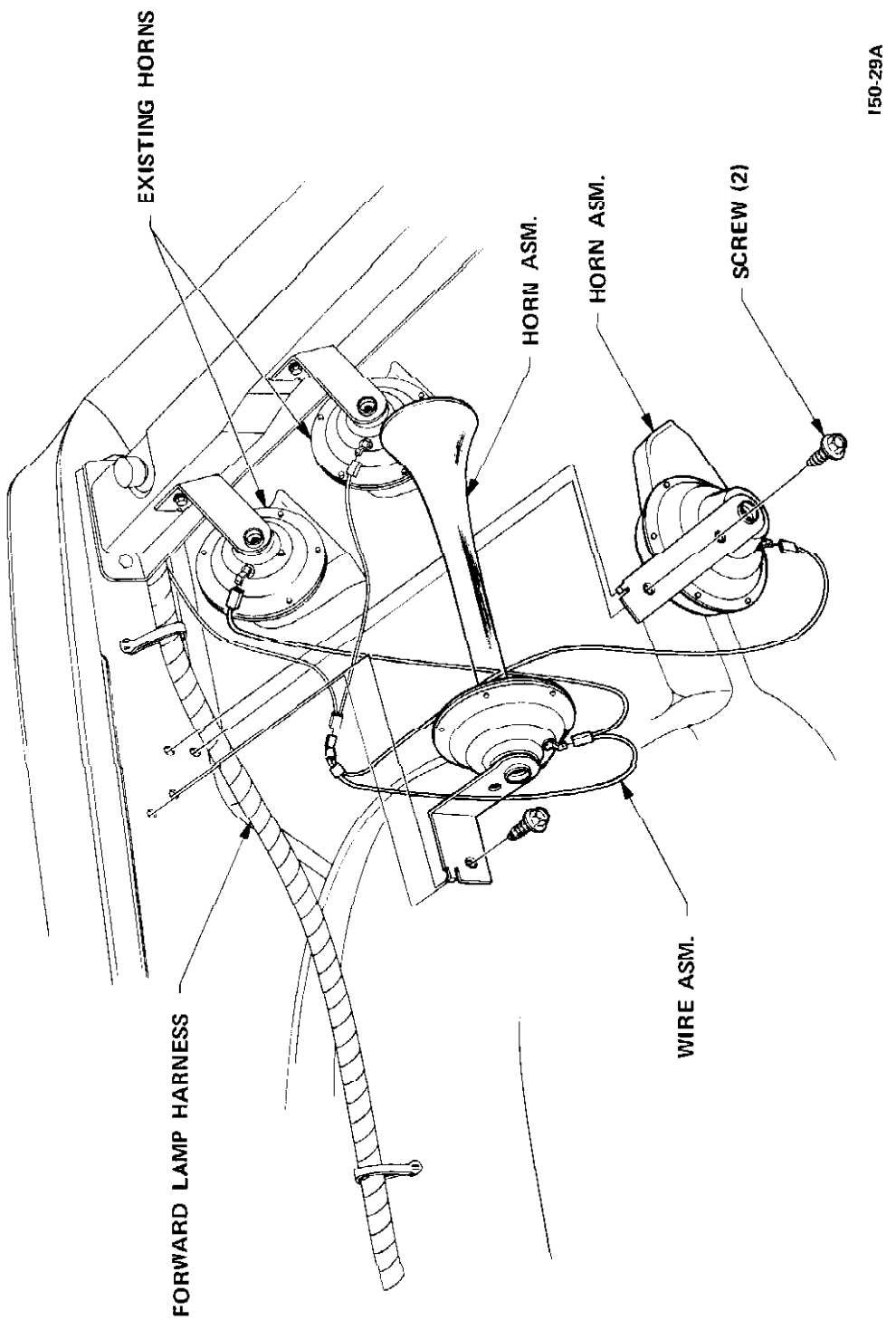

Figure 150-2 Four Note Horn - 45-46-48-49000 Series

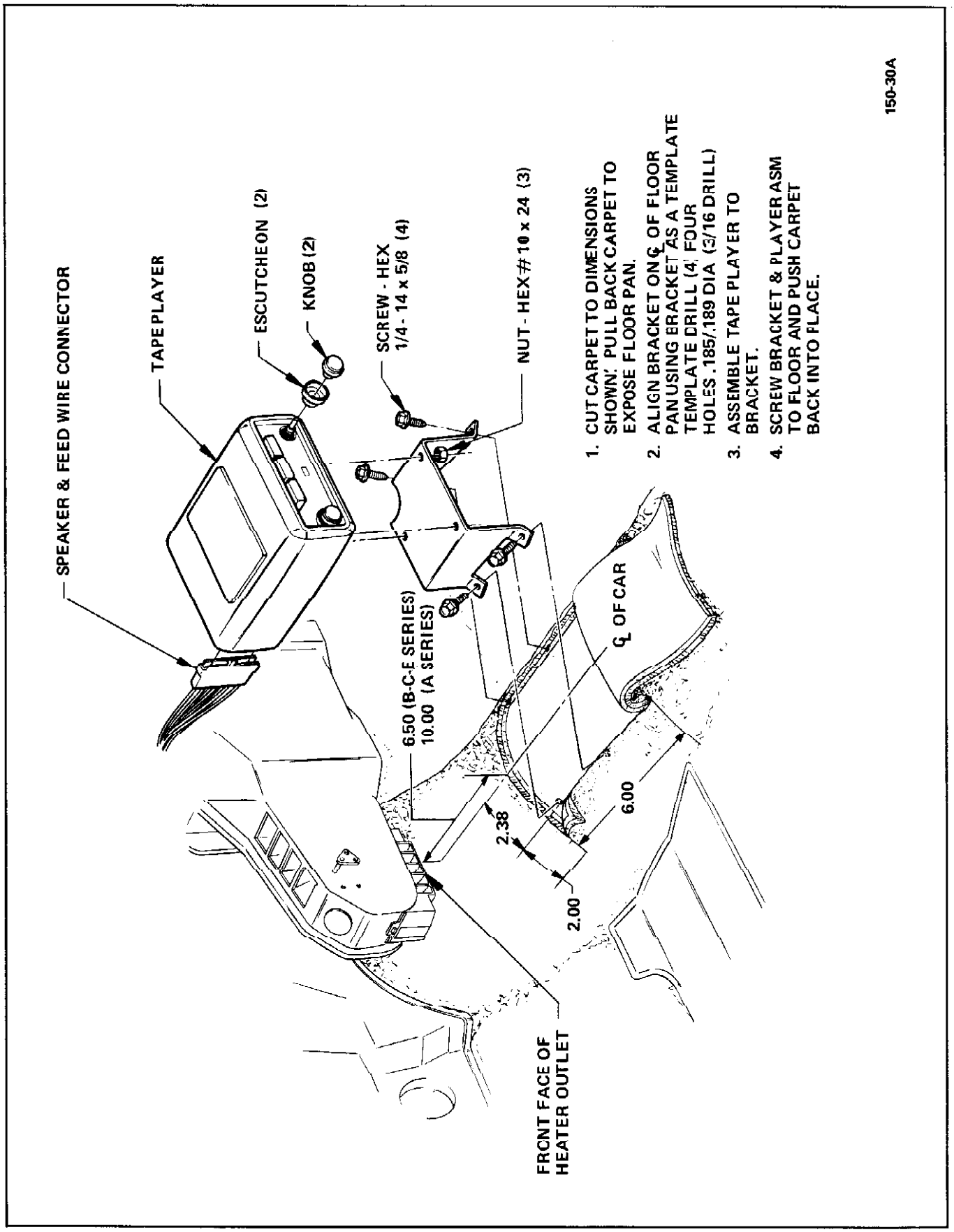

Figure 150-3 Cassette Tape Player Installation - All Series

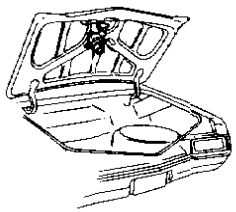

ALL SERIES THRU 1969
"A" BODY - 1970 - 1971

INSTALLATION INSTRUCTIONS (DECK LID)

INSTALL LAMP ASSEMBLY ON DECK LID IN AREA SHOWN ON ALL MODELS. DRILL 3 HOLES USING BRACKET AS GUIDE. SWITCH END OF BRACKET MUST BE POINTING TOWARD REAR OF CAR. USE WIRING HARNESS PROVIDED IN PACKAGE (HARNESS WITHOUT FUSE HOLDER). PLUG INTO EXISTING CONNECTOR AND INSERT EXCESS INTO HOLE IN REAR OF DECK LID.

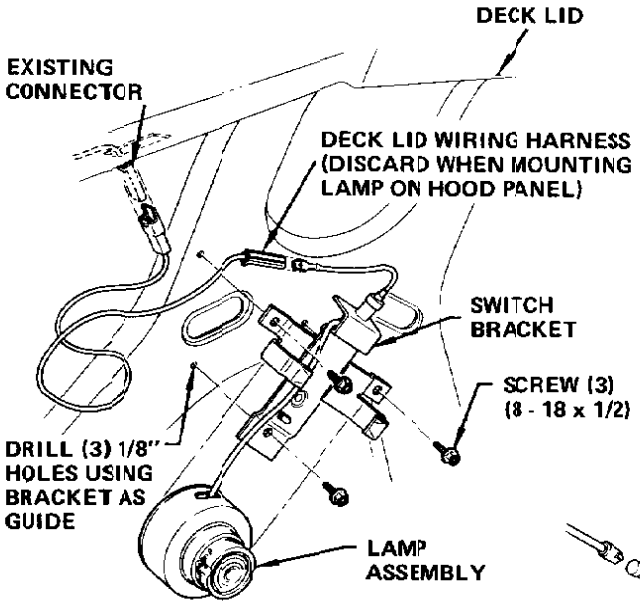

TYPICAL INSTALLATION OF DECK LID LAMP
ALL SERIES - 1967 THRU 1970 EXCEPT "A" BODY - 1970 - 1971

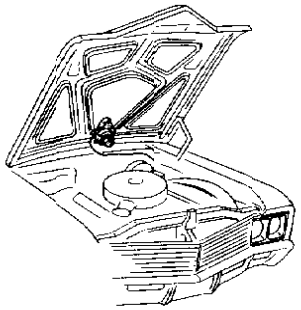

SKYLARK ONLY

NOTES:

FOR PROPER OPERATION, LAMP SHOULD TURN OFF WHEN DECK LID OR HOOD PANEL IS NOT LESS THAN 12 INCHES FROM THE CLOSED POSITION WHEN CAR IS ON LEVEL GROUND.

IF NECESSARY BEND SWITCH BRACKET (USING CAUTION) DOWNWARD TO RAISE LAMP TURN-OFF POINT AND UPWARD TO LOWER TURN-OFF POINT.

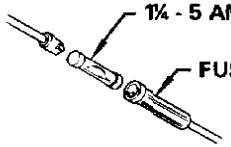

VIEW A

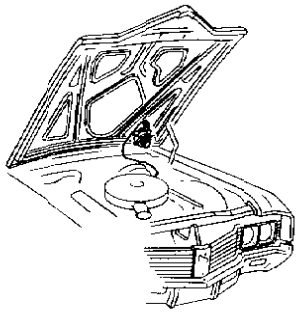

ALL LE SABRE, CENTURION, ELECTRA, RIVIERA

INSTALLATION INSTRUCTIONS (HOOD PANEL)

INSTALL LAMP ASSEMBLY ON HOOD PANELS IN AREA SHOWN, EXCEPT SPECIALS WHICH WILL BE LOCATED ON THE CENTER LINE OF THE HOOD. USE EXISTING HOLES. SWITCH END OF BRACKET MUST BE POINTING TOWARD FRONT OF CAR. USE WIRING HARNESS PROVIDED IN PACKAGE (HARNESS WITH FUSE HOLDER). ROUTE THROUGH WIRING CLIP AND PLUG INTO CONNECTION ON FUSE BLOCK BY LOOSENING SCREW, INSERTING TERMINAL AND RETIGHTENING SCREW. INSERT INTO FUSE HOLDER.

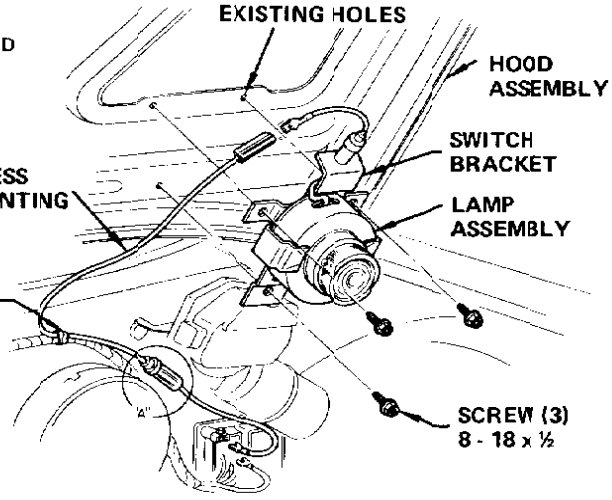

TYPICAL INSTALLATION OF HOOD PANEL LAMP
ALL LE SABRE, CENTURION, ELECTRA, RIVIERA SKYLARK TYPICAL FOR ALL MODELS PRIOR TO 1968 (FOR 1968 - 1971

150-57

Figure 150-4 Utility Light Installation - All Series

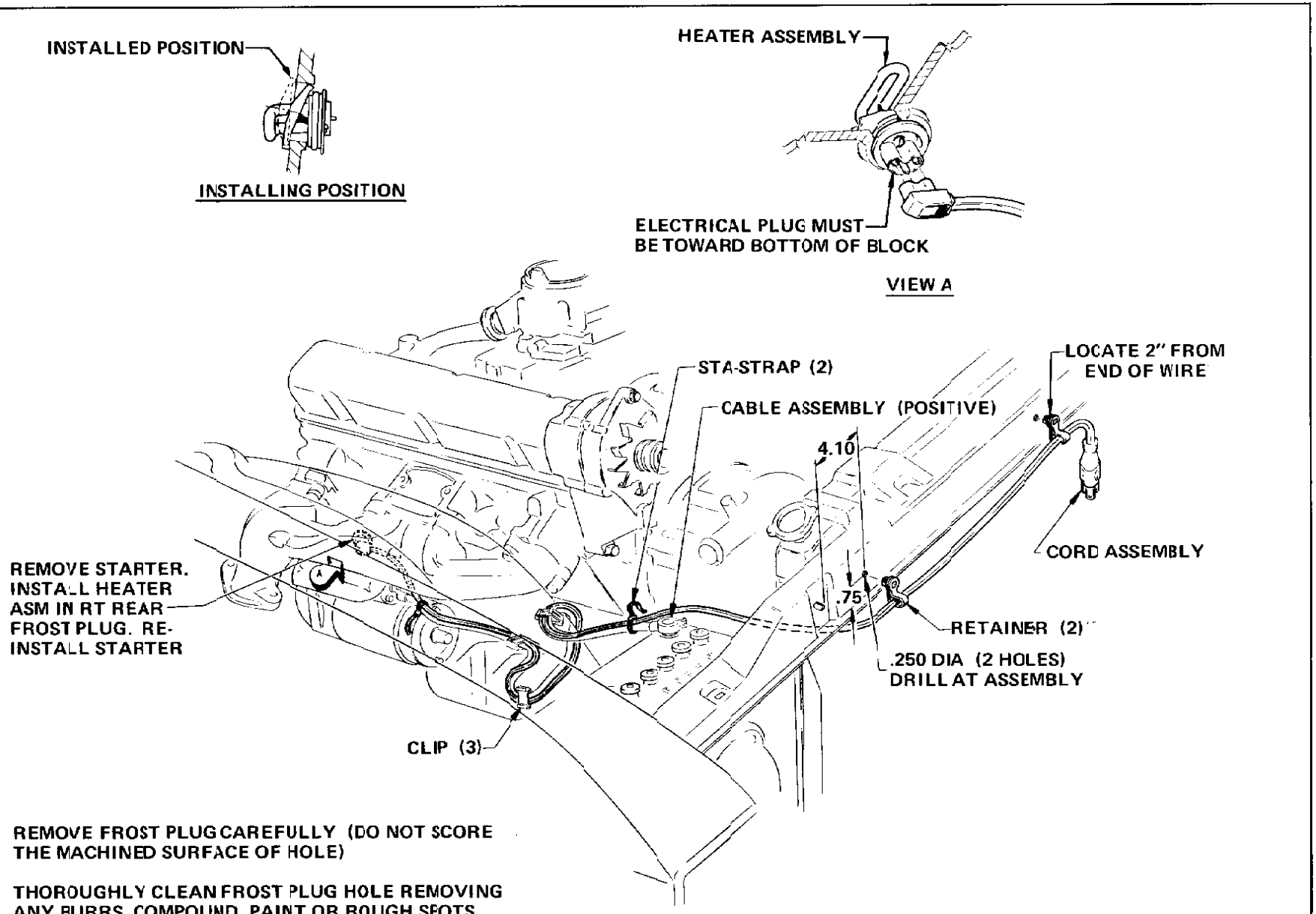

Figure 150-5 Engine Block Heater - 43-44000 Series - 350 Engine

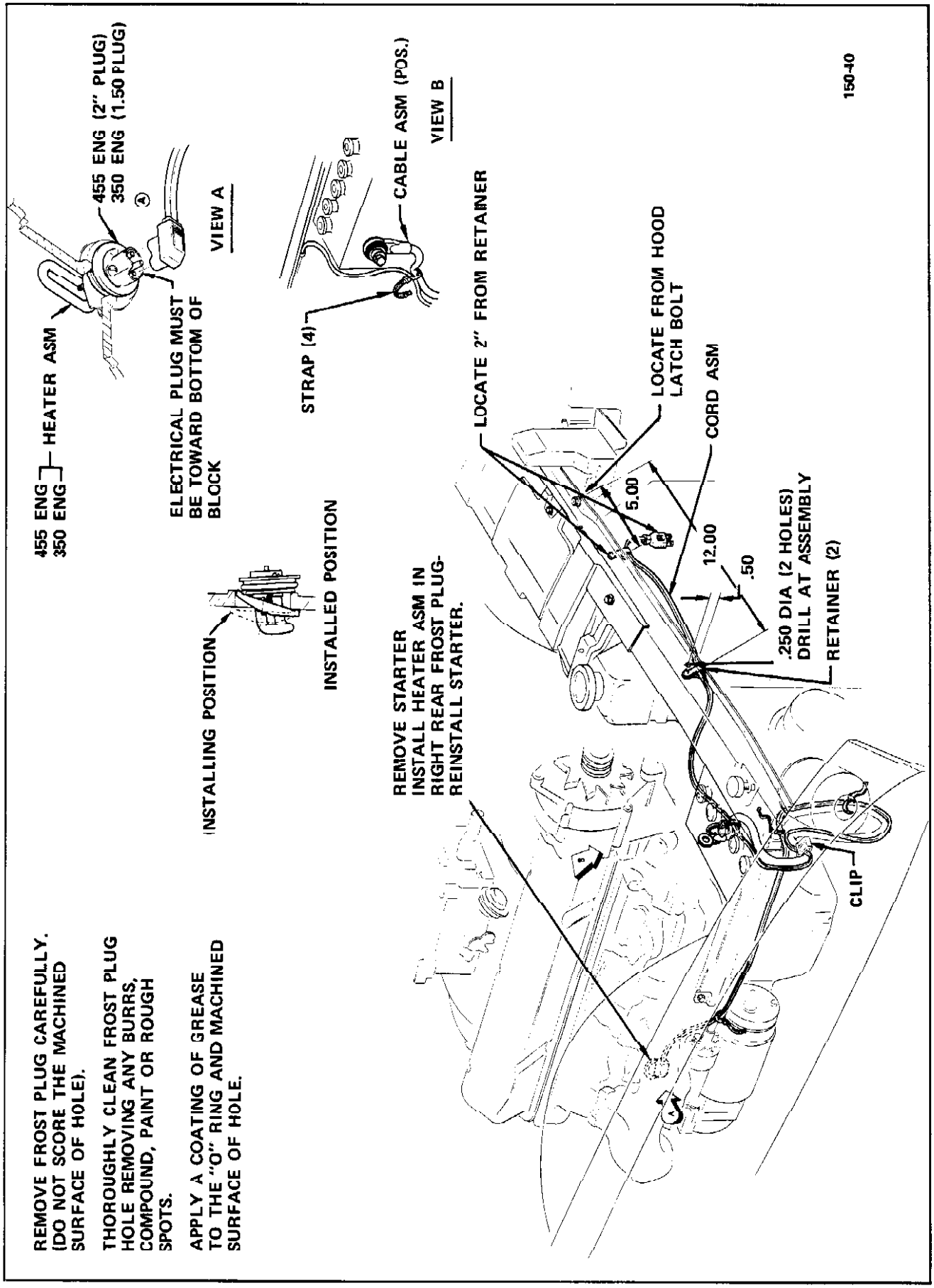

Figure 150-6 Engine Block Heater - 45000 Series - 350 and 455 Engines

ASSEMBLY INSTRUCTIONS

DO NOT TORQUE UNTIL ASSEMBLY IS COMPLETE

STEP 1: SLIDE BUMPER PLATE (B) ONTO DRAW BAR (A) & SECURE WITH FASTENERS MARKED [1]

STEP 2: HOLD HITCH IN POSITION ON CENTERLINE OF CAR WITH DRAW BAR (A) RESTING ON LUGGAGE COMPARTMENT FLOOR & BUMPER PLATE (B) FLUSH AGAINST BUMPER. LOCATE & DRILL TWO .531 INCH HOLES IN BUMPER USING BUMPER PLATE (B) AS A GUIDE. SECURE TO BUMPER WITH FASTENERS MARKED [2]

STEP 3: TURN BACK LUGGAGE COMPARTMENT FLOOR COVERING. ALIGN DRAW BAR AT CENTERLINE OF FLOOR PAN & DRILL .531 INCH HOLE USING DRAW BAR AS A GUIDE. PLACE FLOOR STRAP UPPER (C) & FLOOR STRAP LOWER (D) IN POSITION AS SHOWN. SECURE WITH FASTENERS MARKED [3]

STEP 4: DRILL TWO .531 INCH HOLES USING FLOOR STRAPS AS A GUIDE & SECURE WITH FASTENERS MARKED [4]. REPLACE FLOOR COVERING.

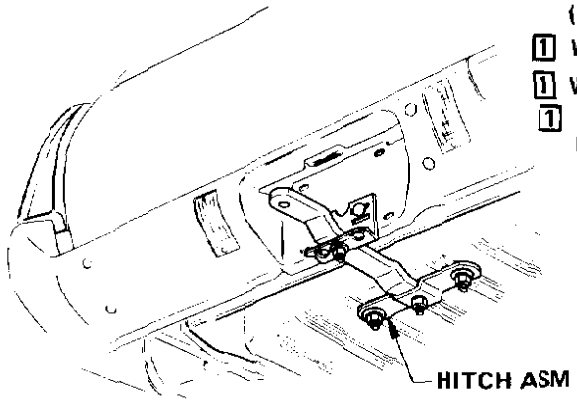

ASSEMBLED VIEW

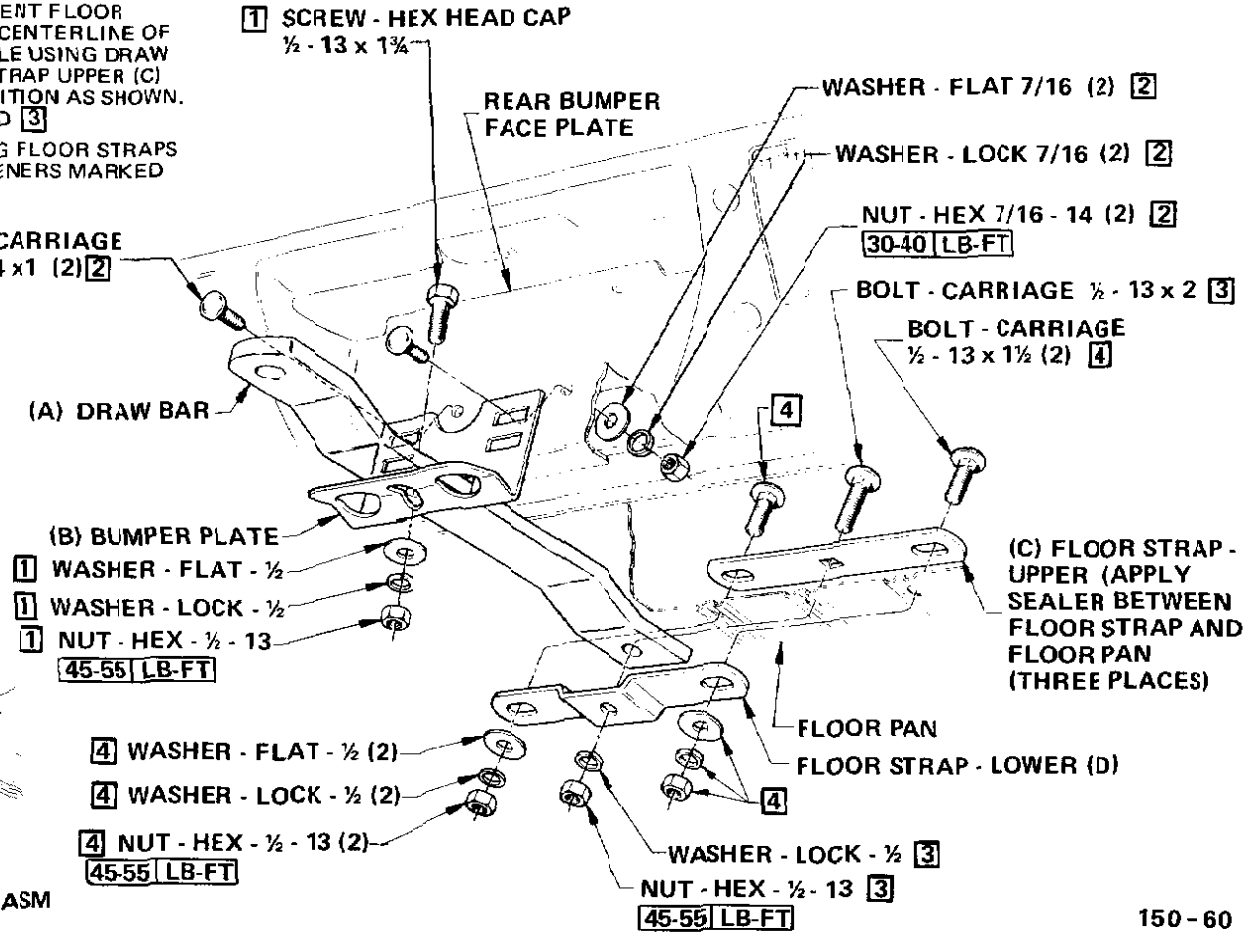

Figure 150-7 Trailer Hitch Assembly - Sportwagon

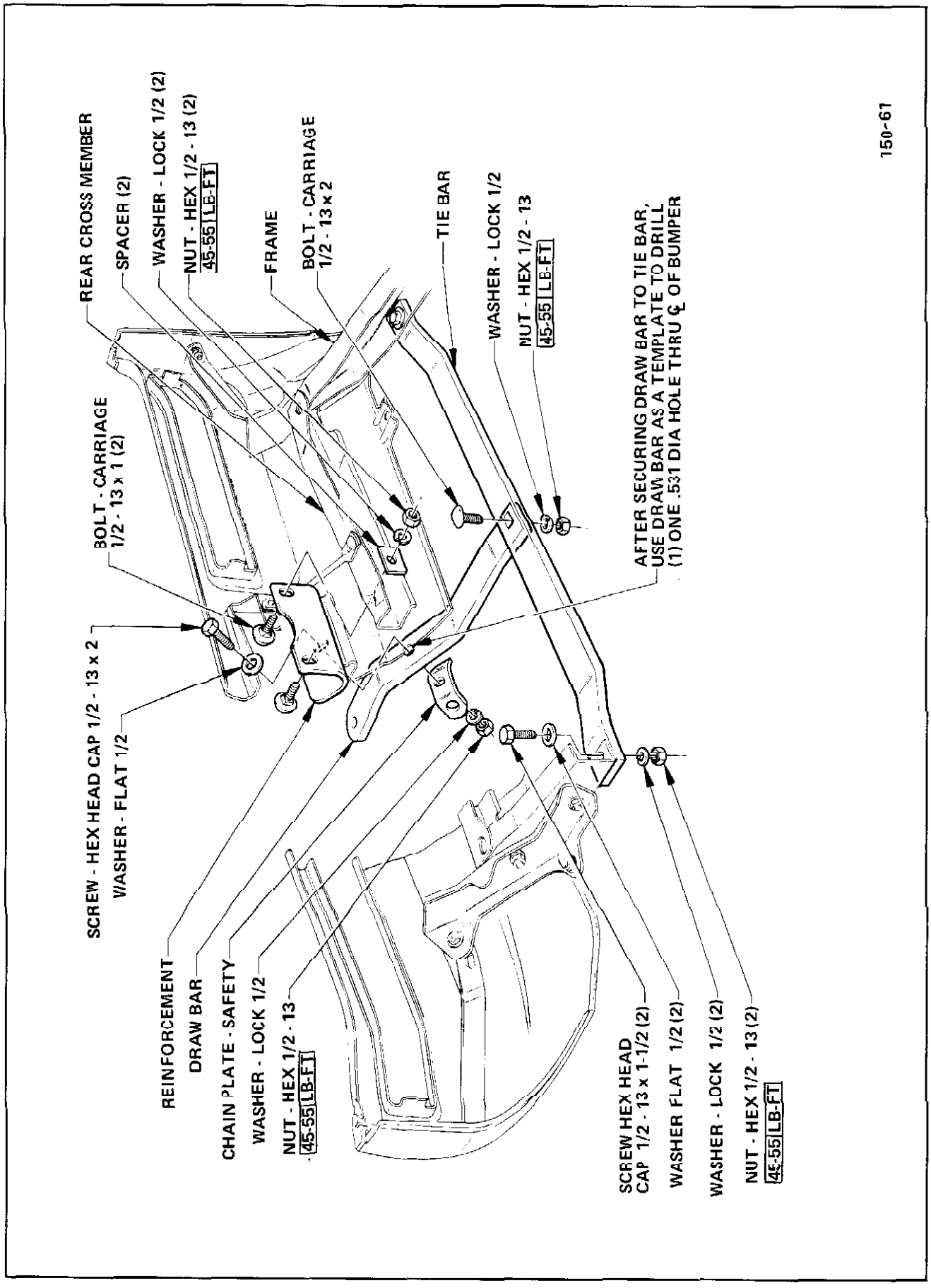

Figure 150-8 Trailer Hitch Assembly - Skylark Less Sportwagon

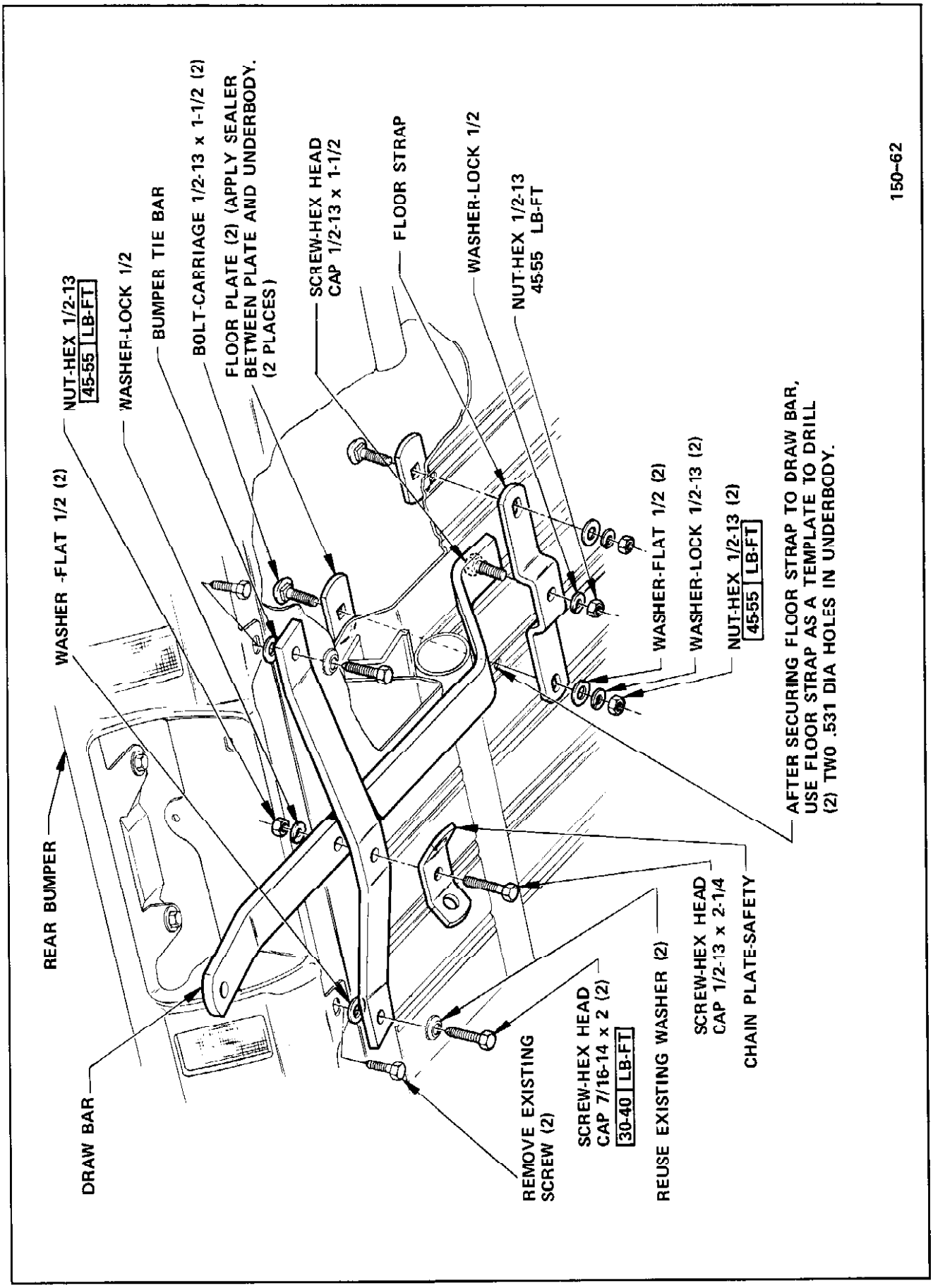

Figure 150-9 Trailer Hitch Assembly - Estate Wagon

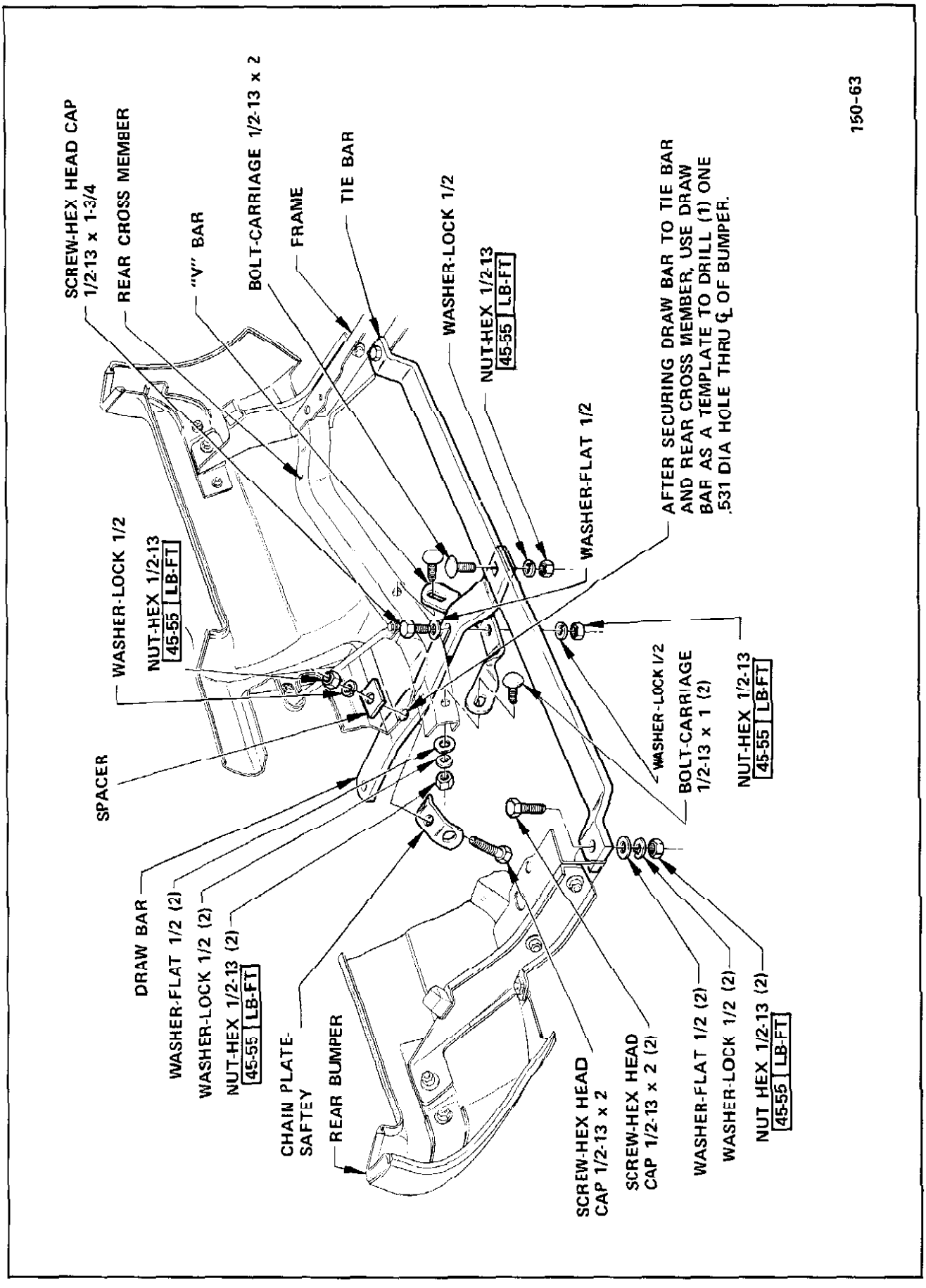

Figure 150-10 Trailer Hitch Assembly - LeSabre and Centurion

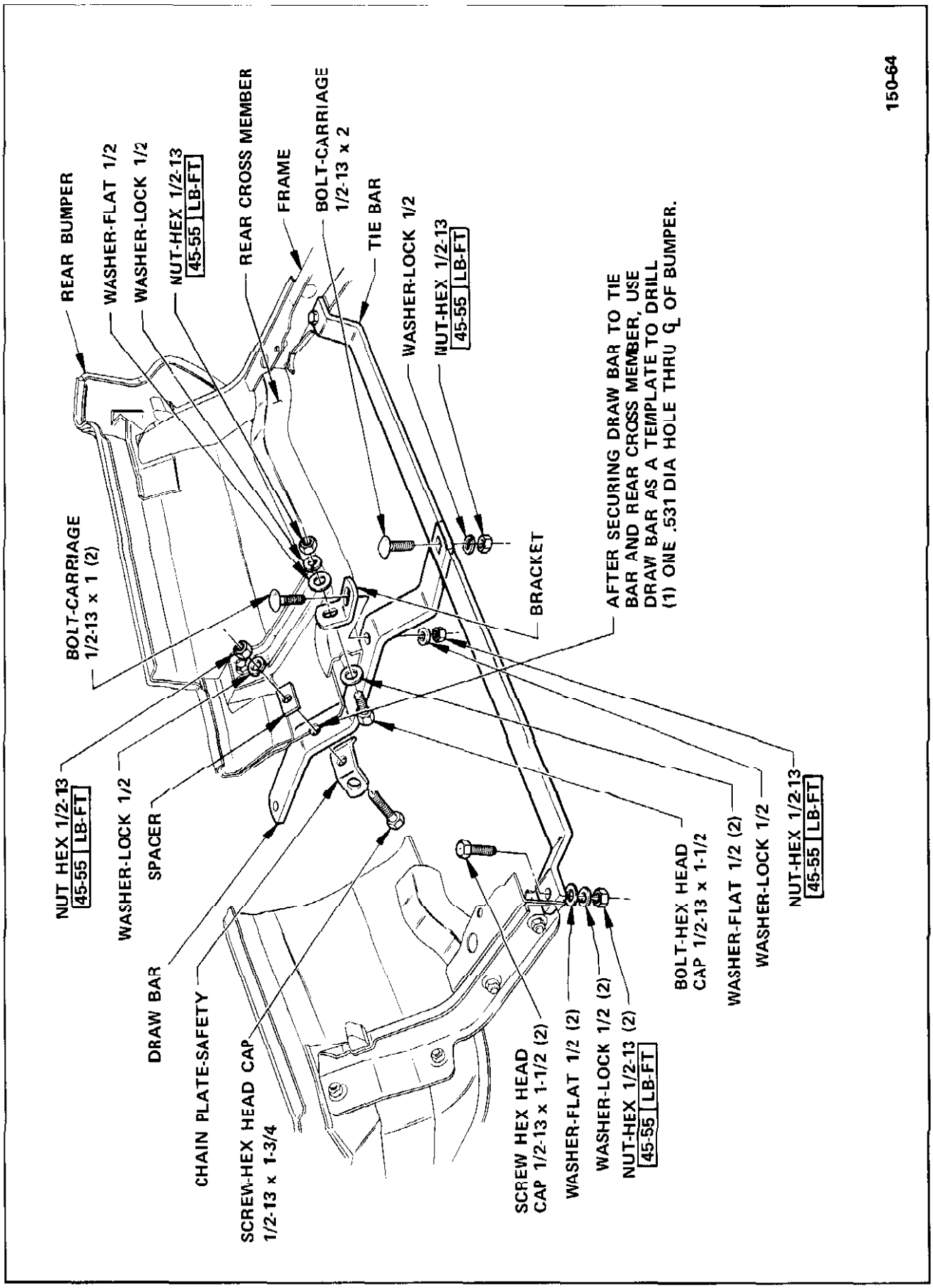

Figure 150-11 Trailer Hitch Assembly - Electra

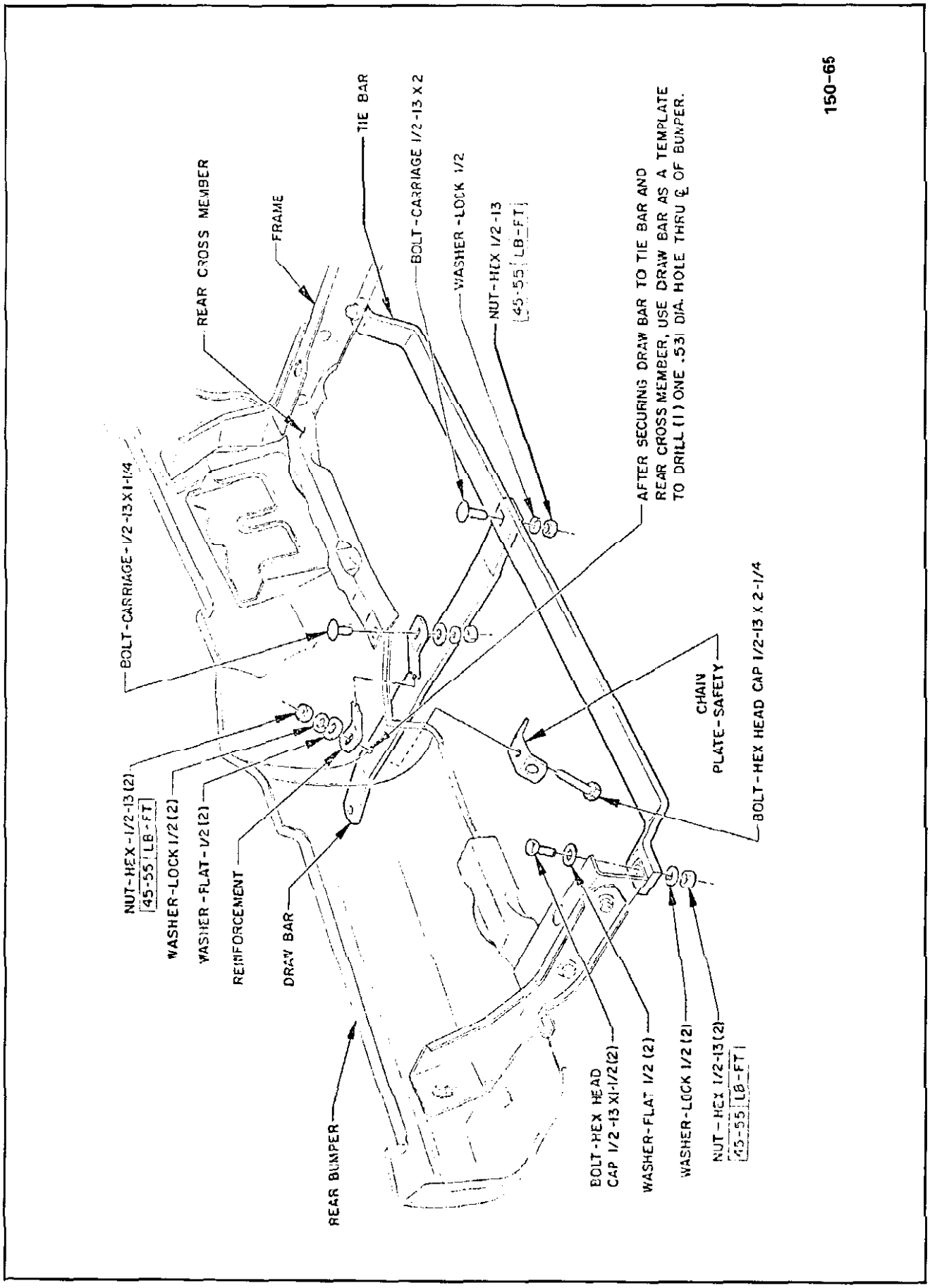

Figure 150-12 Trailer Hitch Assembly - Riviera

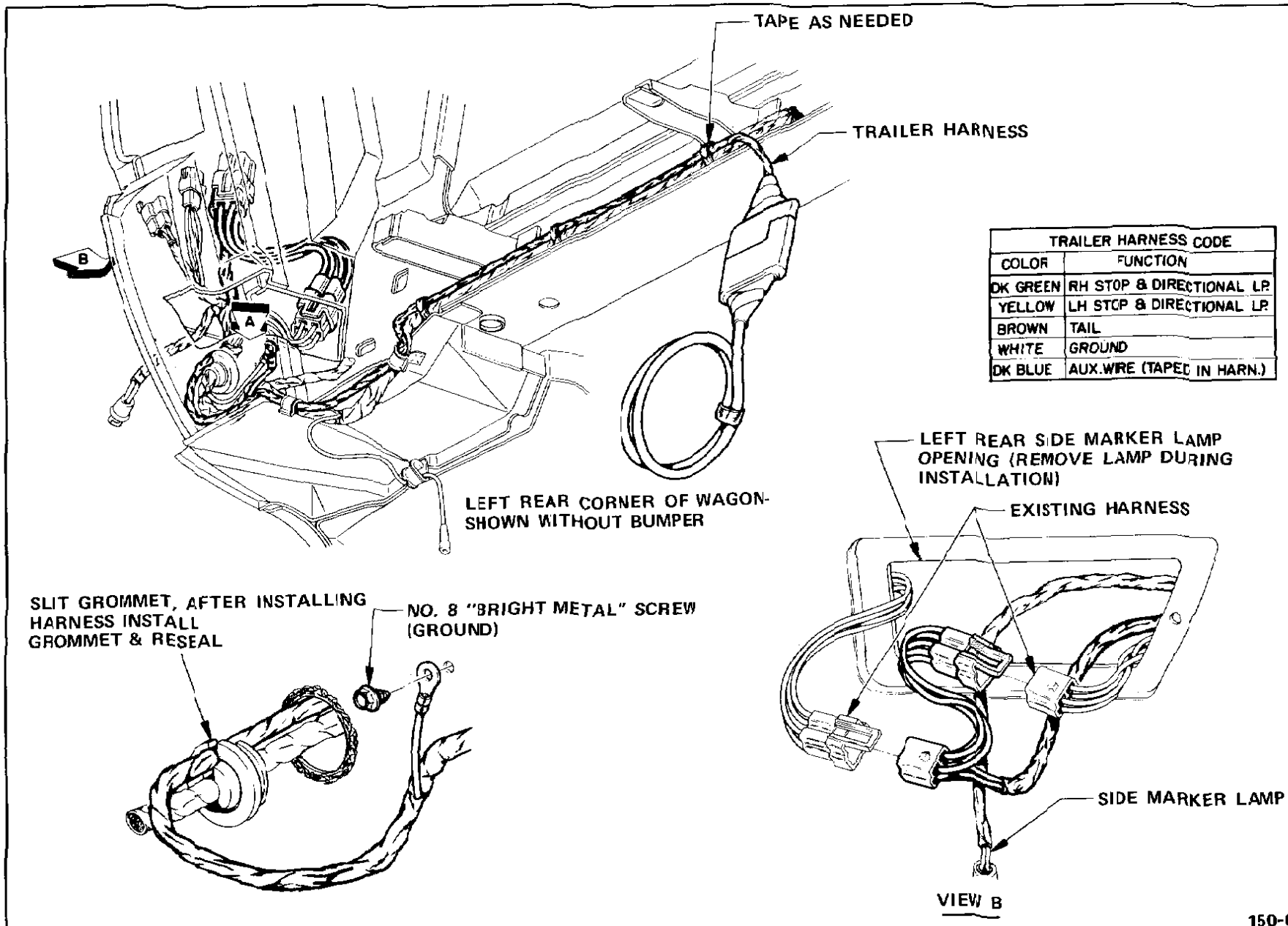

Figure 150-13 Trailer Harness Assembly - Sportwagon

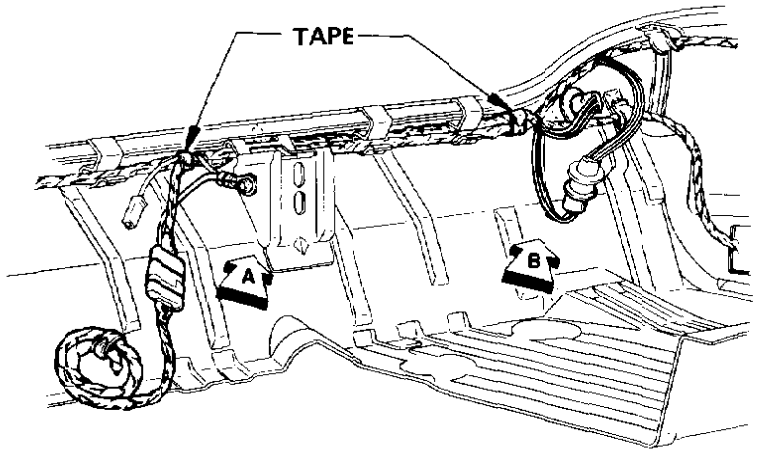

LEFT SIDE OF TRUNK

TRAILER HARNESS CODE	
COLOR	FUNCTION
DK GREEN	RH STOP & DIRECTIONAL LAMP
YELLOW	LH STOP & DIRECTIONAL LAMP
BROWN	TAIL
WHITE	GROUND
DK BLUE	AUX. WIRE (TAPED IN HARNESS)

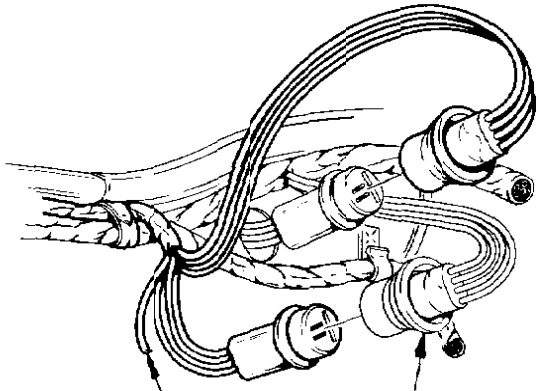

AUXILIARY WIRE

VIEW B

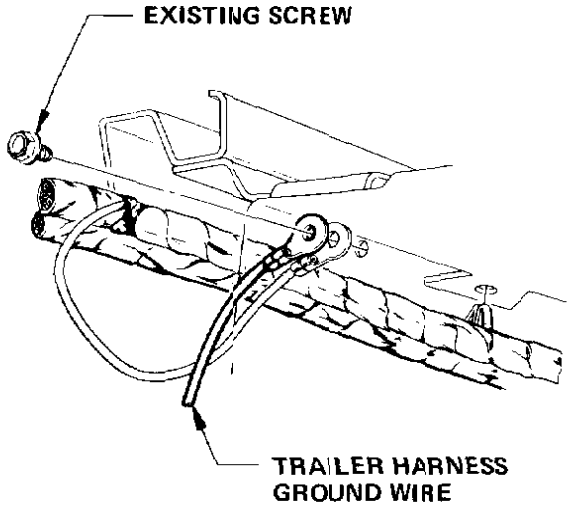

VIEW A

CAREFULLY REMOVE EXISTING HARNESS CONNECTOR FROM BODY. DISCONNECT BUMPER HARNESS FROM BODY HARNESS. CONNECT TRAILER HARNESS AS SHOWN & REINSTALL CONNECTOR INTO BODY.

150-67

Figure 150-14 Trailer Harness Assembly - Skylark Less Sportwagon

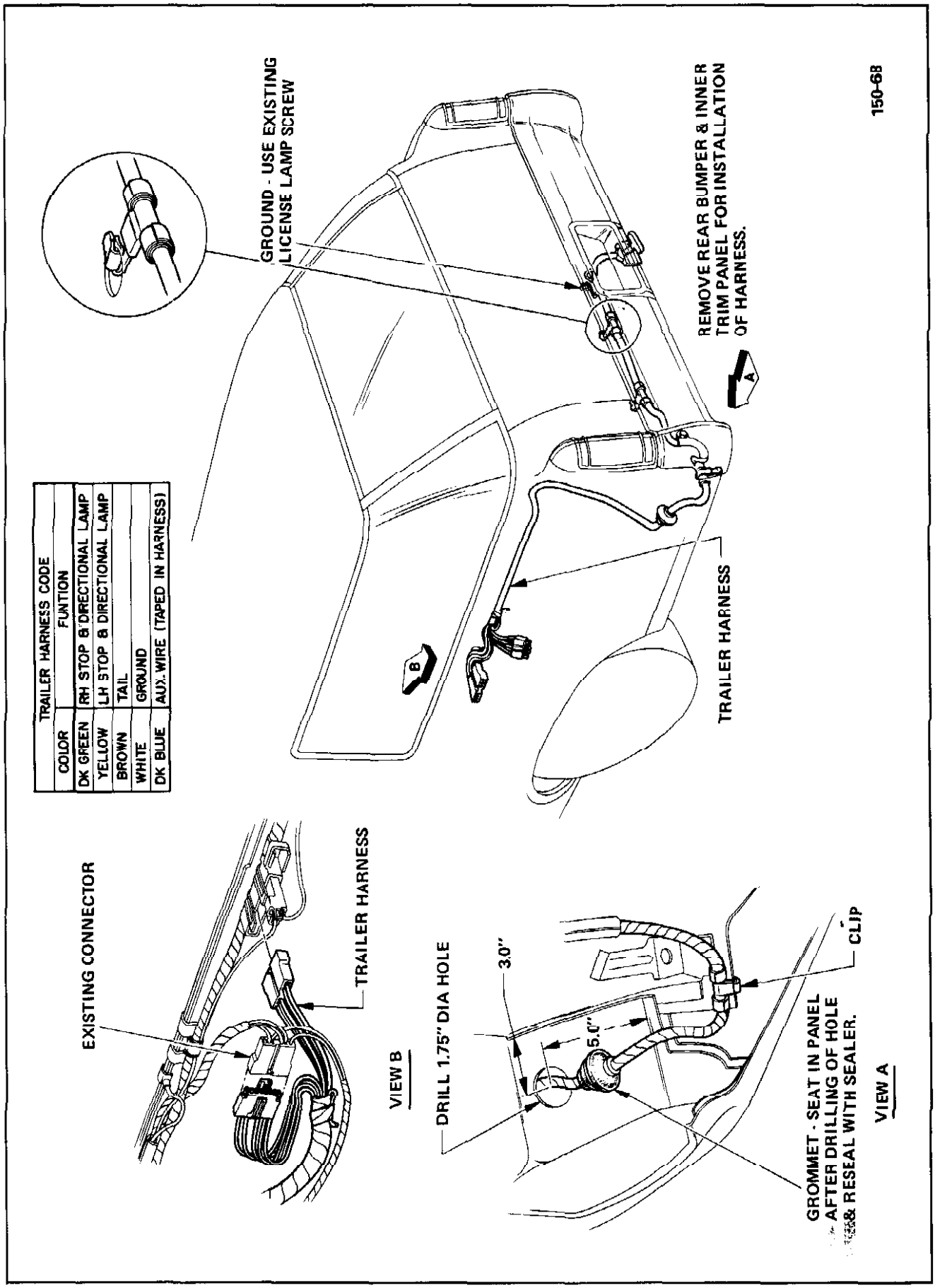

Figure 150-15 Trailer Harness Assembly - Estate Wagon

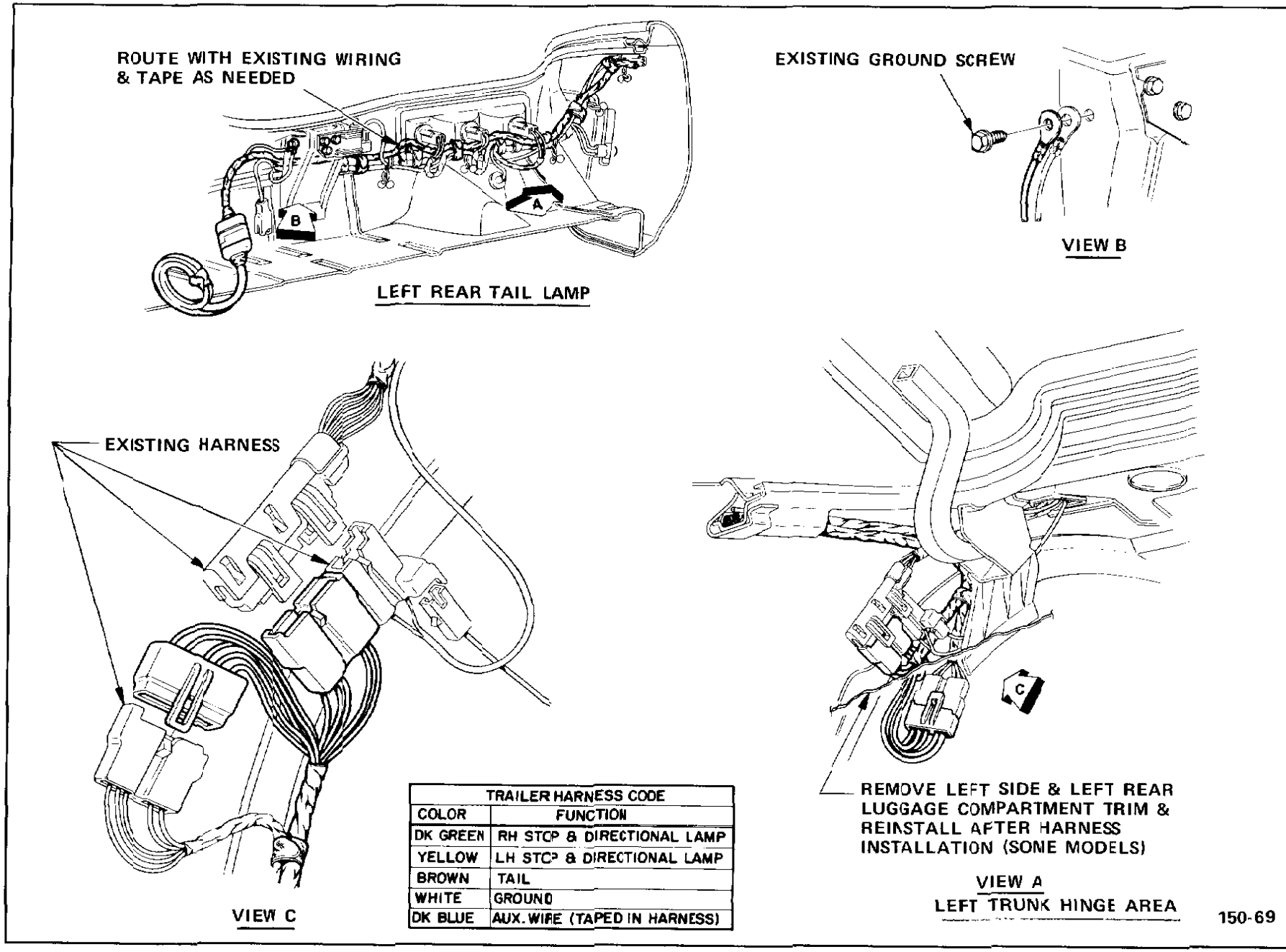

TRAILER HARNESS CODE	
COLOR	FUNCTION
DK GREEN	RH STOP & DIRECTIONAL LAMP
YELLOW	LH STOP & DIRECTIONAL LAMP
BROWN	TAIL
WHITE	GROUND
DK BLUE	AUX. WIRE (TAPED IN HARNESS)

Figure 150-16 Trailer Harness Assembly - LeSabre, Centruion, Electra, and Riviera

INSTRUCTION SHEET - BACK WINDOW DEFOGGER

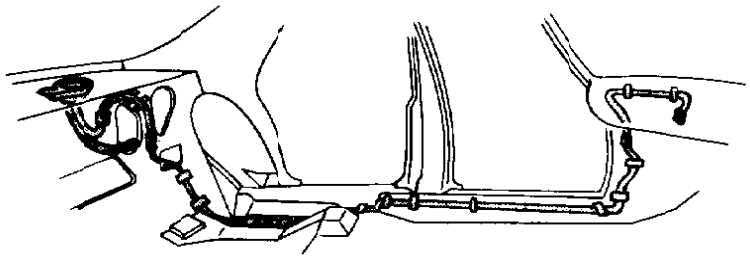

STEP 1. REMOVE NECESSARY TRIM AND ROUTE DEFOGGER WIRE ON DRIVER'S SIDE AS SHOWN AND TAPE AS REQUIRED.

STEP 2. USE EXISTING 1/4" HOLES IN PANEL AS GUIDE AND DRILL FOUR (4) HOLES IN TRIM.

STEP 3. USE EXISTING CUT-OUTS IN PANEL AS GUIDE AND CUT TRIM AS REQUIRED FOR DEFOGGER OPENINGS.

STEP 4. INSTALL GRILLE WITH LOCATING STUD REARWARD TO MAKE IMPRESSION IN TRIM. REMOVE GRILLE AND DRILL HOLE FOR LOCATING STUD.

STEP 5. INSTALL GRILLE, COVER, AND BLOWER WITH FOUR (4) NUTS AS SHOWN.

STEP 6. CONNECT TO HARNESS AS SHOWN. ATTACH GROUND WIRE CLIP FOR BLOWER TO EDGE OF HOLE IN SEAT BACK PANEL.

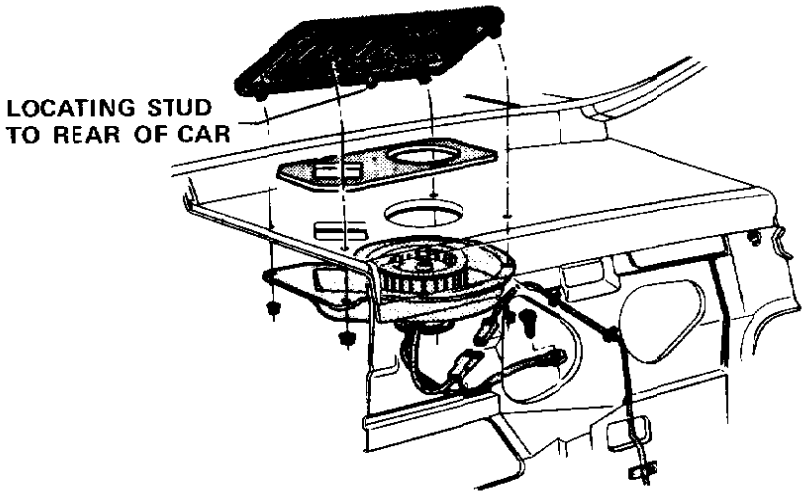

150-70

Figure 150-17 Rear Window Defogger - Skylark Less Sportwagon

INSTRUCTION SHEET - BACK WINDOW DEFOGGER

STEP 1. REMOVE NECESSARY TRIM AND ROUTE DEFOGGER WIRE ON DRIVER'S SIDE AS SHOWN AND TAPE AS REQUIRED.

STEP 2. USE EXISTING 1/4" HOLES IN PANEL AS GUIDE AND DRILL FOUR (4) HOLES IN TRIM.

STEP 3. USE EXISTING CUT-OUTS IN PANEL AS GUIDES AND CUT TRIM AS REQUIRED FOR DEFOGGER OPENINGS.

STEP 4. INSTALL GRILLE TO MAKE IMPRESSION IN TRIM. REMOVE GRILLE AND DRILL HOLE FOR LOCATING STUD.

STEP 5. INSTALL GRILLE, COVER, AND BLOWER WITH FOUR (4) NUTS AS SHOWN.

STEP 6. CONNECT TO HARNESS AS SHOWN. ATTACH GROUND WIRE CLIP FOR BLOWER TO EDGE OF HOLE IN SEAT BACK PANEL.

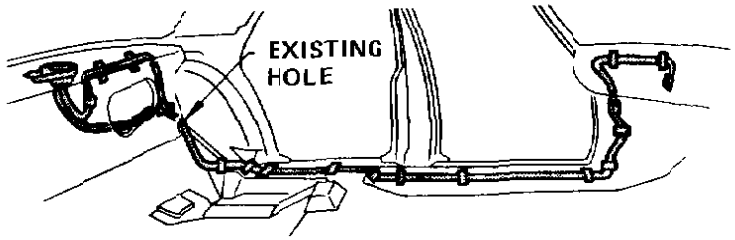

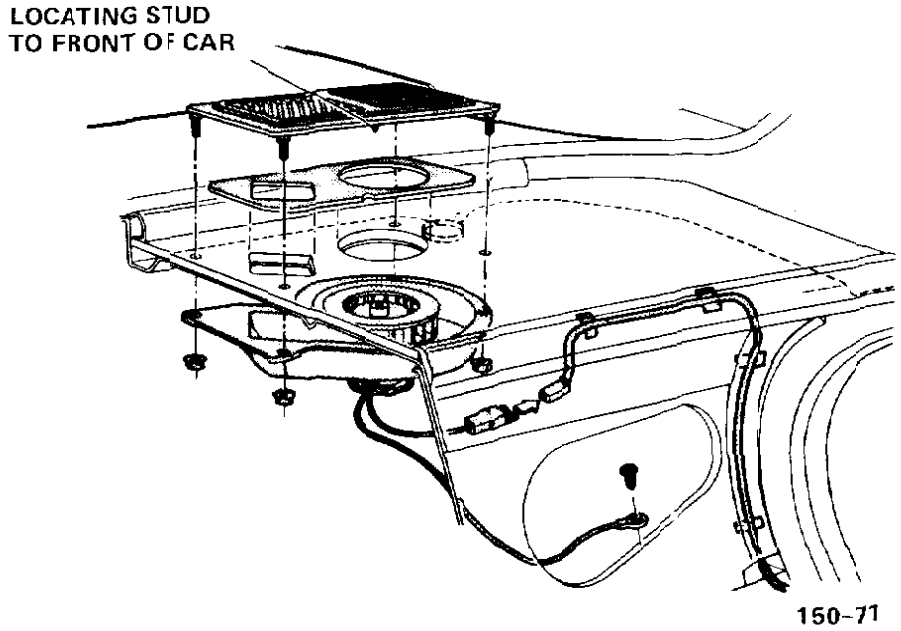

Figure 150-18 Rear Window Defogger - LeSabre, Centurion, and Electra, Less Estate Wagon

RIVIERA ONLY

INSTRUCTION SHEET - BACK WINDOW DEFOGGER

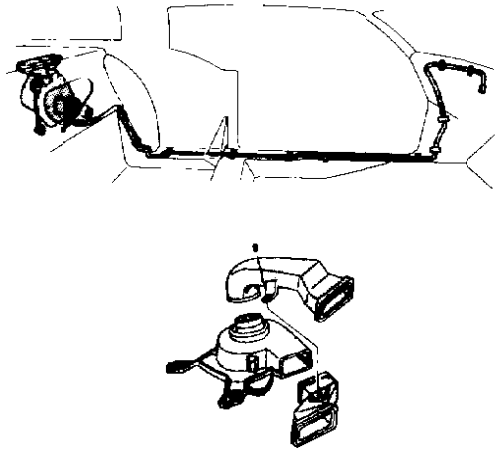

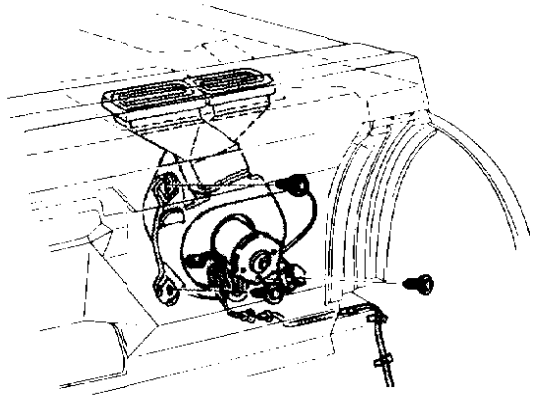

STEP 1. REMOVE NECESSARY TRIM, ROUTE DEFOGGER WIRE ON DRIVER'S SIDE AS SHOWN AND TAPE AS REQUIRED.

STEP 2. ASSEMBLE DUCT AND NOZZLE TO BLOWER WITH ONE (1) SCREW AS SHOWN.

STEP 3. INSERT BLOWER ASSEMBLY THROUGH HOLE IN SHELF AND ALIGN WITH THREE (3) EXISTING SLOTS.

STEP 4. SECURE BLOWER ASSEMBLY WITH THREE (3) SCREWS AS SHOWN.

STEP 5. CONNECT TO HARNESS AS SHOWN. ATTACH GROUND WIRE CLIP FOR BLOWER TO EDGE OF HOLE IN SEAT BACK PANEL.

150-72

Figure 150-19 Rear Window Defogger - Riviera

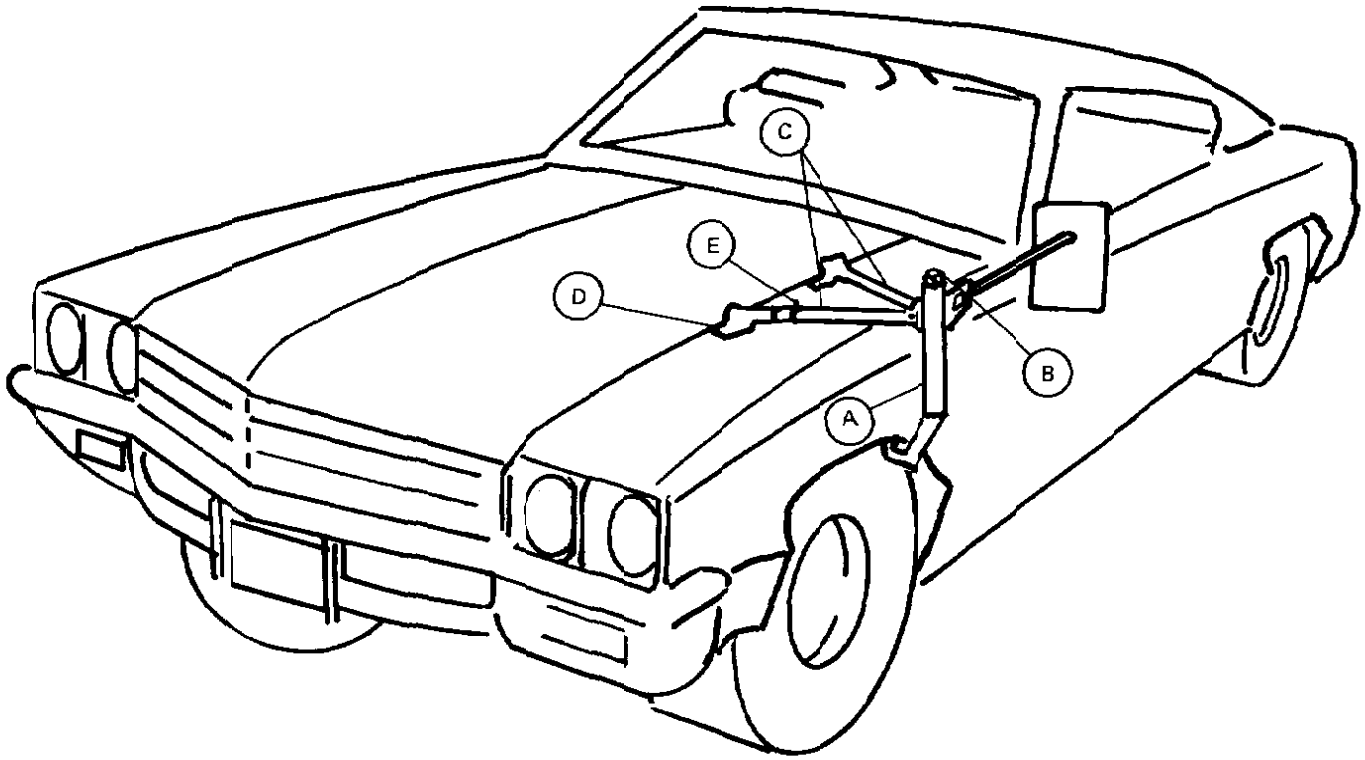

Unfold arms of tripod and assemble mirror for either left or right hand installation.

1 – Free hook tube assembly (A) by turning hex bolt (B) counterclockwise.

2 – Attach hook tube at center of fender well, making sure it is parallel to fender or angled towards fender. **(NEVER ALLOW THIS TUBE TO ANGLE AWAY FROM FENDER.** Adjust length of telescoping locking tubes (C), keeping them as short and equal in length as possible. Tubes must be either horizontal or angled up from fender. **(NEVER ANGLED DOWN TO THE FENDER).** It is important that anchor brackets (D) lie flat on top of fender before closing hood.

3 – Tighten square head set screws (E) in telescoping locking tube collars.

Before driving, adjust mirror height and angle for best visibility. Check all bolts and nuts to make certain that mirror has been securely mounted.

To remove mirror for storage, just loosen center hex bolt until anchor brackets can be lifted out of hood opening. Fold all arms toward center tube and store.

150-73

Figure 150-20 Typical Fender Mount Mirror Installation

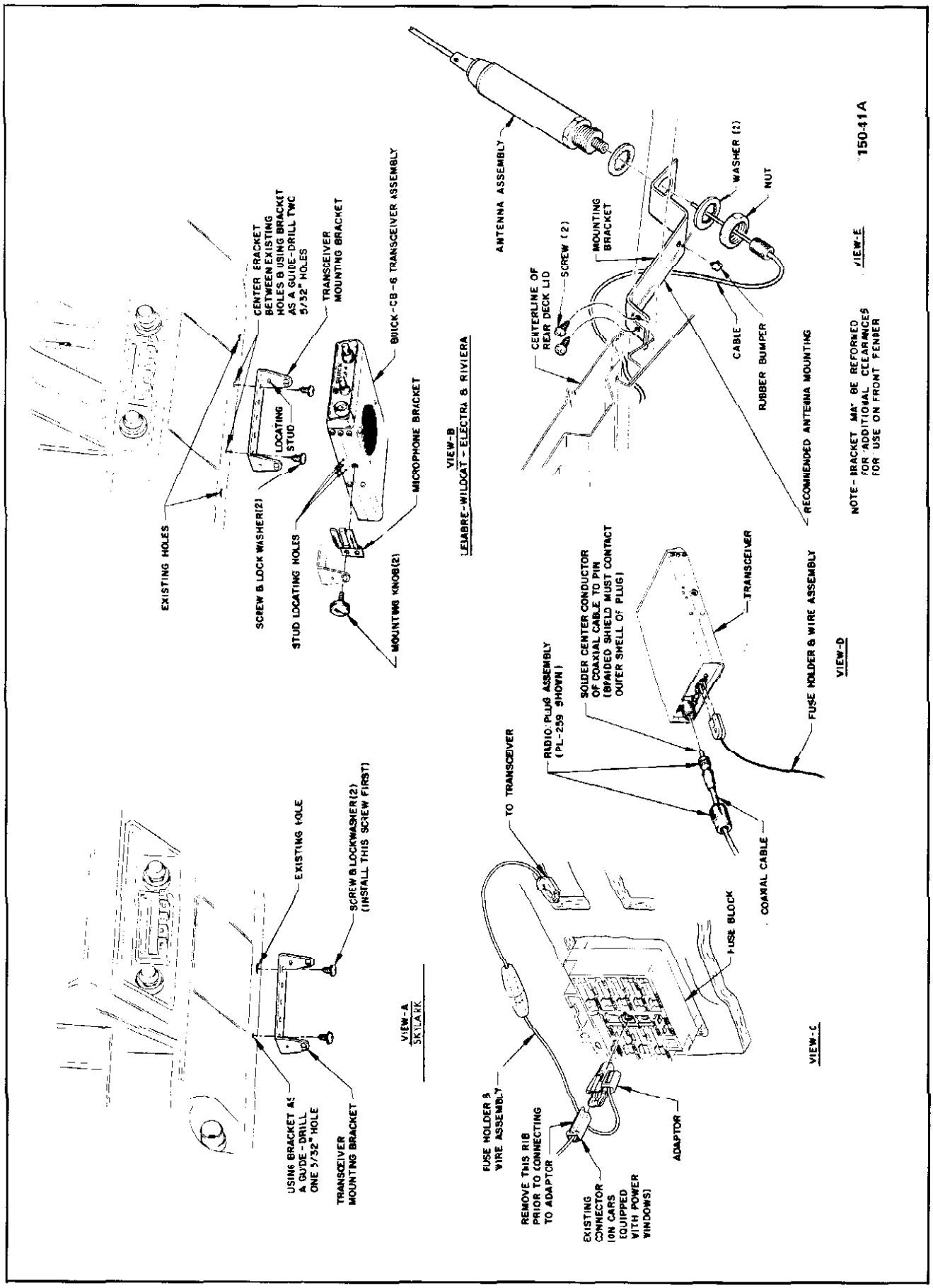

Figure 150-21 Typical CB Radio Installation

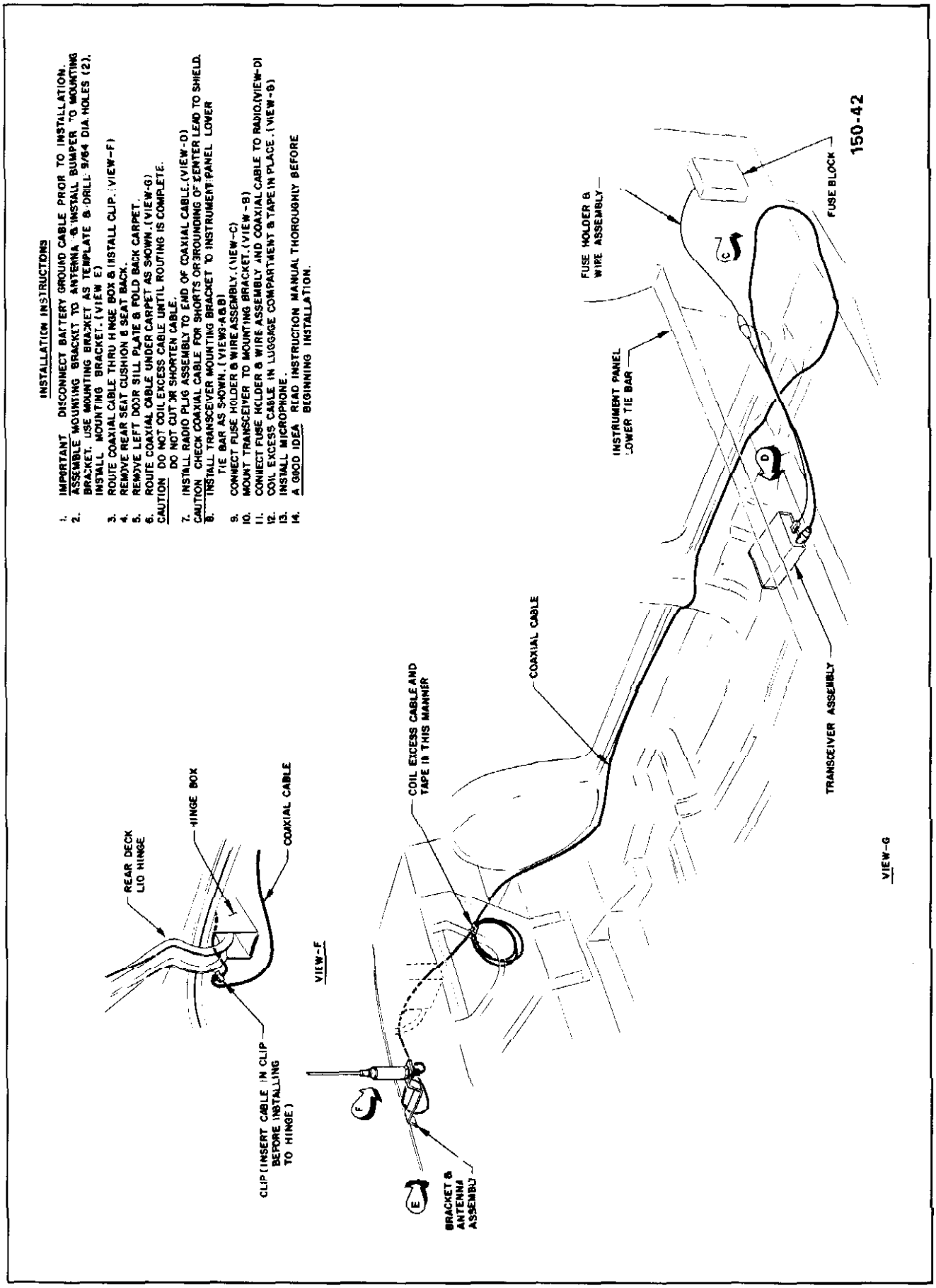

Figure 150-22 Typical CB Cable Routing

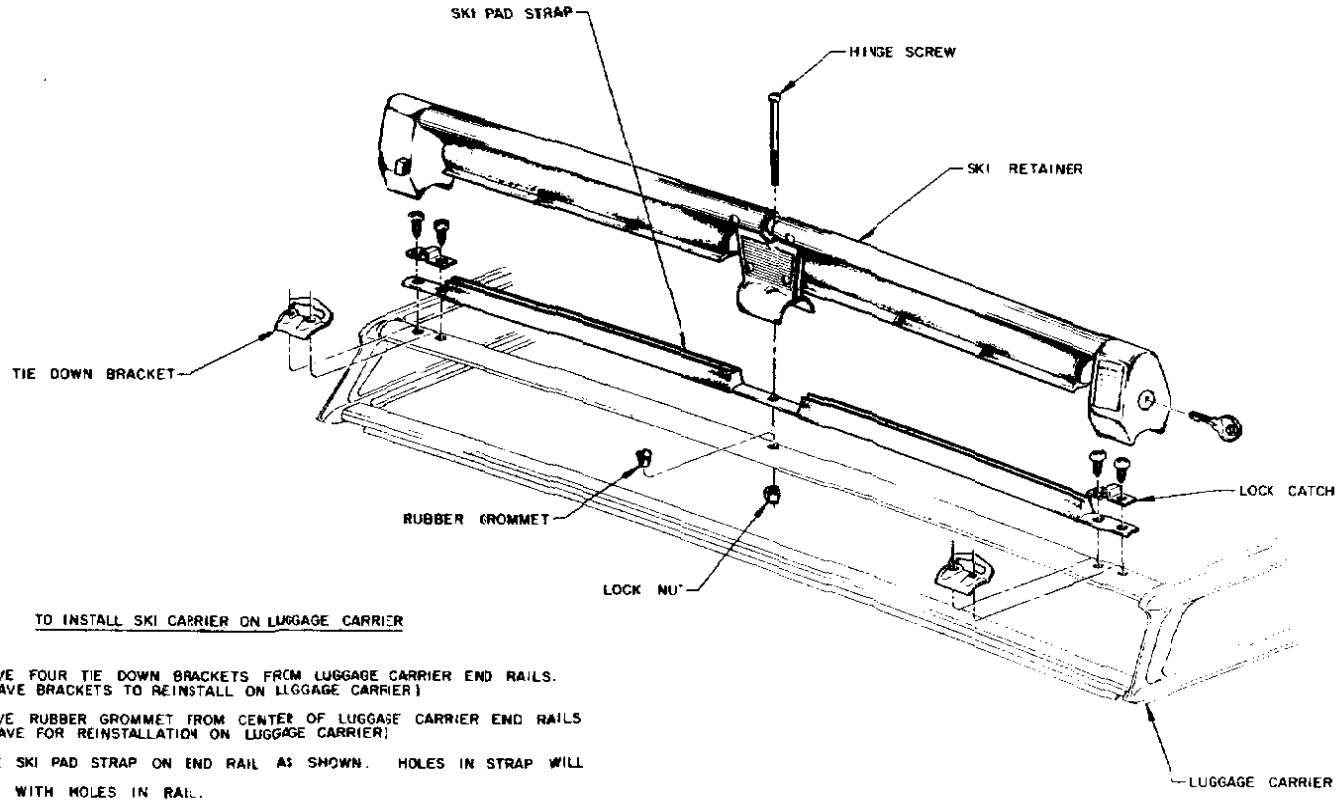

TO INSTALL SKI CARRIER ON LUGGAGE CARRIER

1. REMOVE FOUR TIE DOWN BRACKETS FROM LUGGAGE CARRIER END RAILS. (SAVE BRACKETS TO REINSTALL ON LUGGAGE CARRIER)
2. REMOVE RUBBER GROMMET FROM CENTER OF LUGGAGE CARRIER END RAILS (SAVE FOR REINSTALLATION ON LUGGAGE CARRIER)
3. PLACE SKI PAD STRAP ON END RAIL AS SHOWN. HOLES IN STRAP WILL ALIGN WITH HOLES IN RAIL.
4. REPLACE TIE DOWN BRACKETS WITH LOCK CATCHES AS SHOWN, REUSING SCREWS FROM TIE DOWN BRACKETS.
5. PLACE SKI RETAINER ON SKI PAD STRAP AND TIGHTEN HINGE SCREW AT CENTER WITH LOCK NUT, BOTH PROVIDED IN PACKAGE.
6. OUTER END OF SKI RETAINER SHOULD STRIKE LOCK CATCH TO PERMIT LOCKING WITH KEYS PROVIDED IN PACKAGE.

(A) TRUNK MOUNTED SKIS MORE THAN 6" LONGER THAN VEHICLE IS WIDE SHOULD NOT BE CARRIED ON THIS RACK. LOAD SKIS SO THEY DO NOT PROJECT BEYOND LEFT FENDER LINE OR MORE THAN 6" BEYOND RIGHT FENDER LINE.

150-54

Figure 150-23 Ski Carrier to Luggage Carrier Insallation

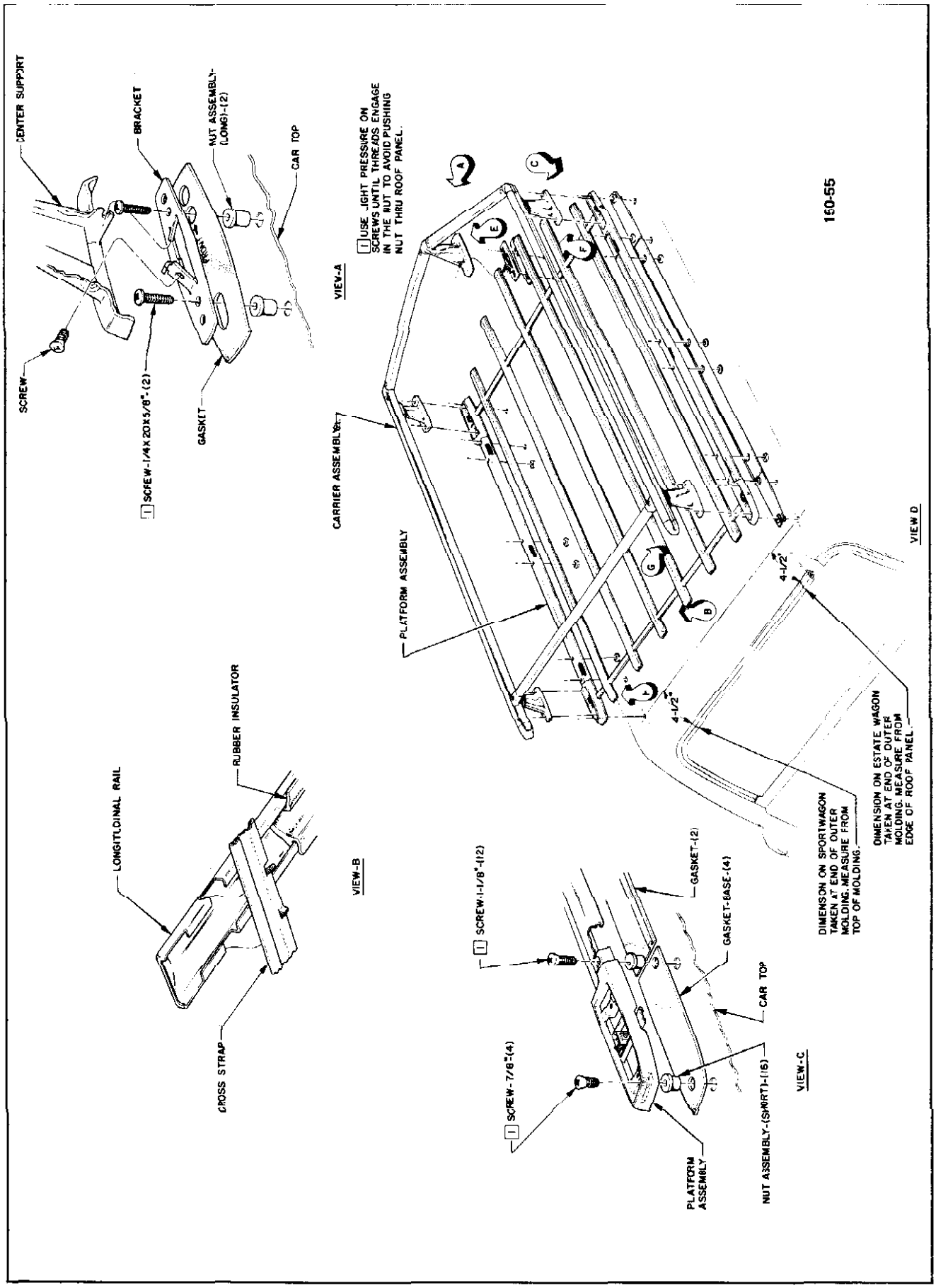

Figure 150-24 Roof Luggage Carrier Installation - Sportwagon and Estate Wagon

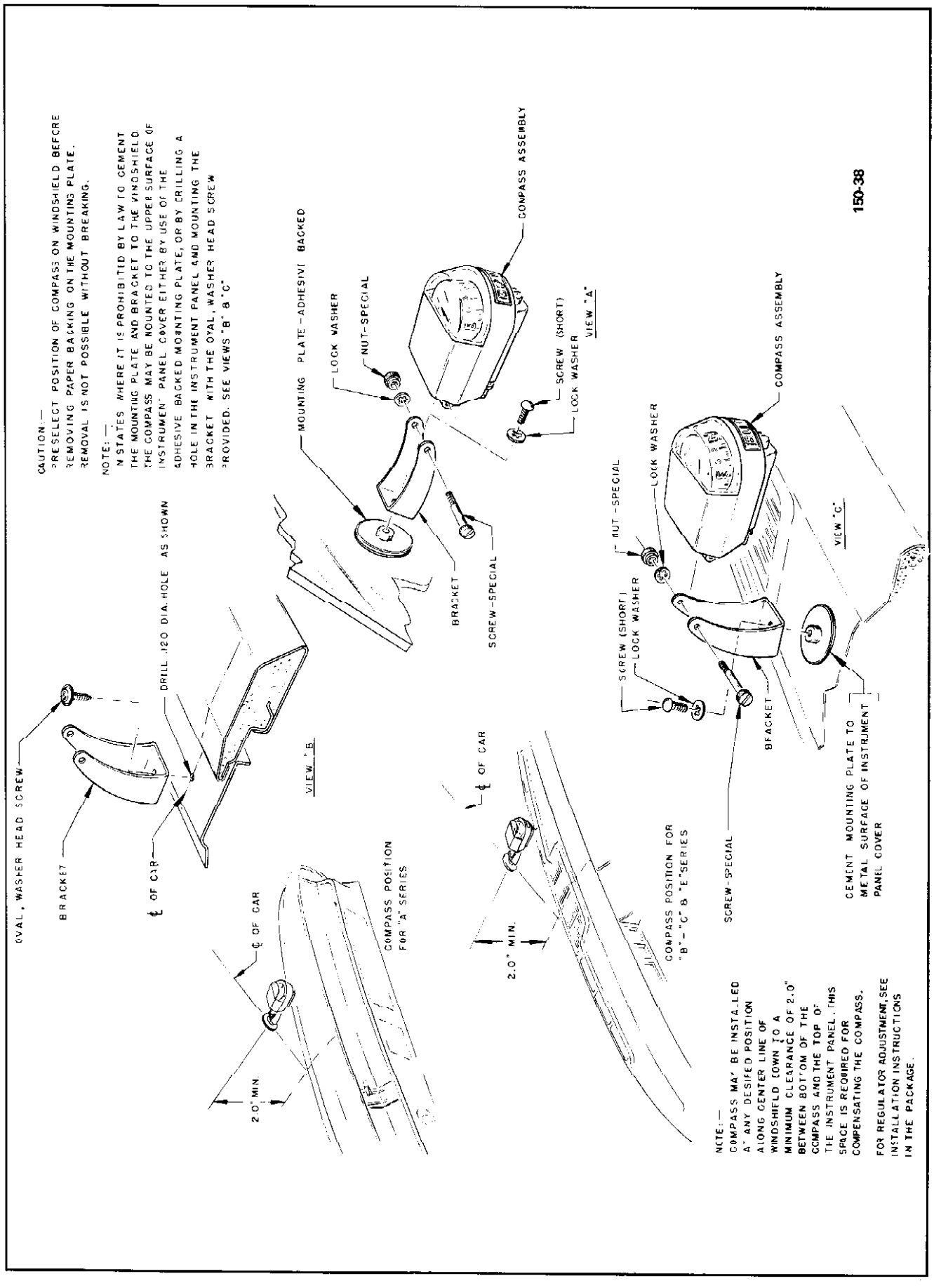

Figure 150-25 Typical Compass Installation

Step 1. Remove and discard existing courtesy lamp and glove box. light harness. Retain bulbs, glove box light switch assembly and courtesy lamp screw.

Step 2. Install lid lock release switch with guard as shown.

Step 3. Install previously used courtesy lamp bulb to lamp portion of new harness and attach lamp to instrument panel with previously used screw.

Step 4. Attach previously used glove box light switch assembly to new harnesses and reinsert switch in opening in glove box.

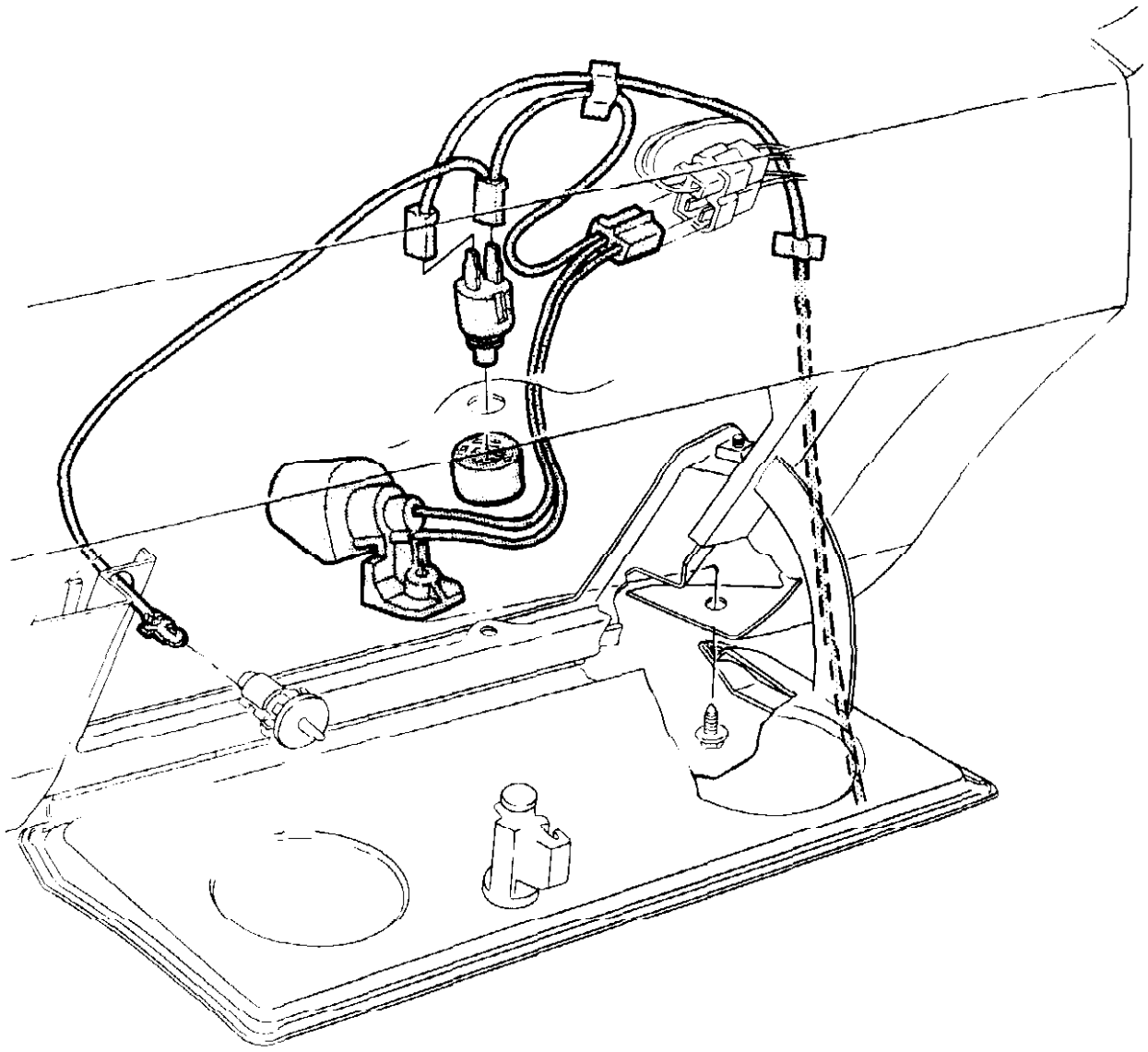

Step 5. Connect harness as shown.

150-74

Figure 150-26 Typical Electric Trunk Release Switch Installation

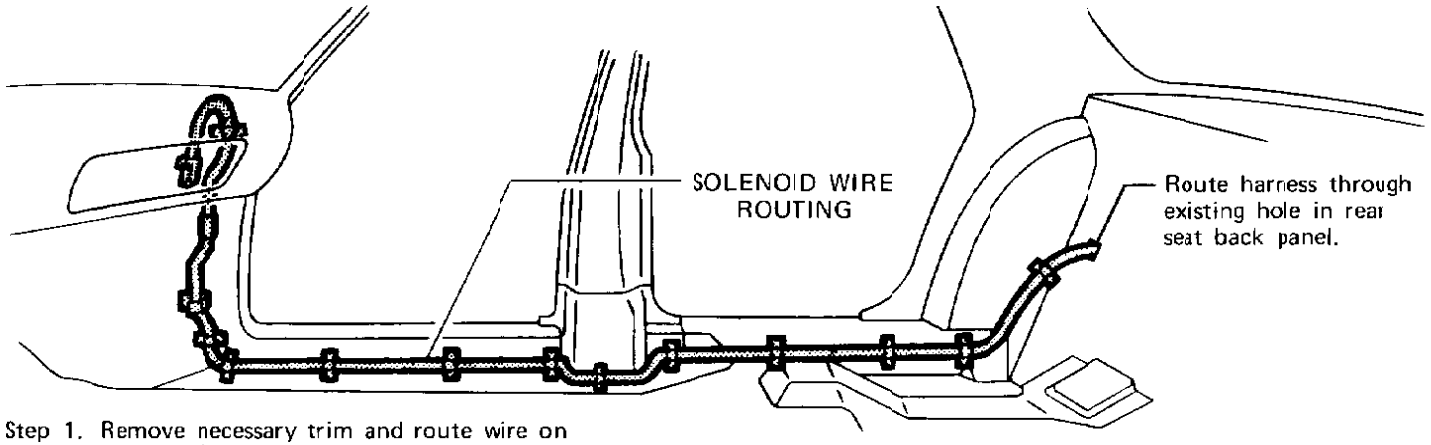

Step 1. Remove necessary trim and route wire on passenger's side as shown. Tape as required.
Step 2. Open deck lid and clip new harness with three supplied clips to existing harness as shown. Step 3.
Step 3. Loosen bolt "A" and remove bolt "B" in anchor plate.
Step 4. Install solenoid as shown, tighten bolt "A", replace and tighten bolt "B".

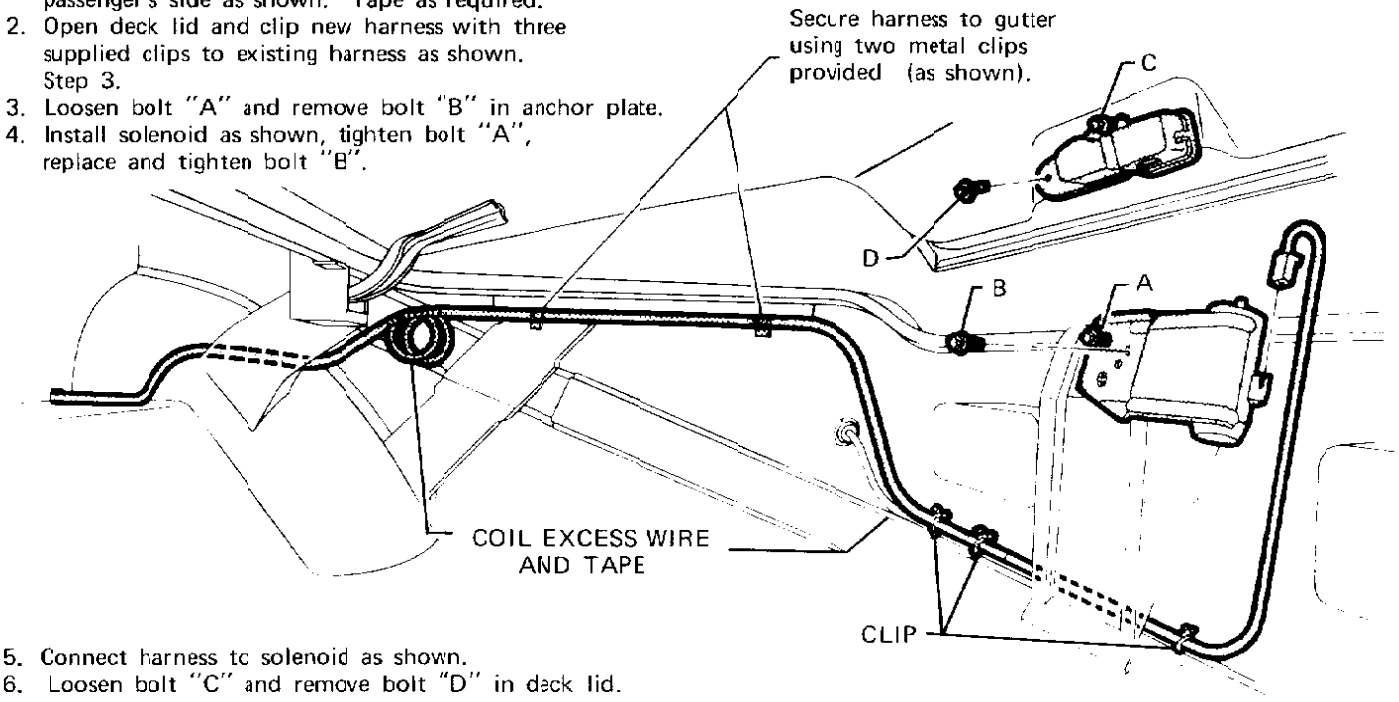

Step 5. Connect harness to solenoid as shown.
Step 6. Loosen bolt "C" and remove bolt "D" in deck lid.
Step 7. Install actuator assembly to deck lid, tighten bolt "C", replace and tighten bolt "D".

150-75

Figure 150-27 Typical Electric Trunk Release Wire Routing and Latch Installation

DECIMAL EQUIVALENTS

1/64	.015625	33/64	.515625
1/32	.03125	17/32	.53125
3/64	.046875	35/64	.546875
1/16	.0625	9/16	.5625
5/64	.078125	37/64	.578125
3/32	.09375	19/32	.59375
7/64	.109375	39/64	.609375
1/8	.125	5/8	.625
9/64	.140625	41/64	.640625
5/32	.15625	21/32	.65625
11/64	.171875	43/64	.671875
3/16	.1875	11/16	.6875
13/64	.203125	45/64	.703125
7/32	.21875	23/32	.71875
15/64	.234375	47/64	.734375
1/4	.25	3/4	.75
17/64	.265625	49/64	.765625
9/32	.28125	25/32	.78125
19/64	.296875	51/64	.796875
5/16	.3125	13/16	.8125
21/64	.328125	53/64	.828125
11/32	.34375	27/32	.84375
23/64	.359375	55/64	.859375
3/8	.375	7/8	.875
25/64	.390625	57/64	.890625
13/32	.40625	29/32	.90625
27/64	.421875	59/64	.921875
7/16	.4375	15/16	.9375
29/64	.453125	61/64	.953125
15/32	.46875	31/32	.96875
31/64	.484375	63/64	.984375
1/2	.5	1	1.

150-58

Decimal Equivalents

TAPS · DIES · GAGES · SCREW PLATES · SCREW EXTRACTORS

DECIMAL EQUIVALENTS AND TAP DRILL SIZES

DRILL SIZE	DECIMAL	TAP SIZE
1/64	.0156	
1/32	.0312	
60	.0400	
59	.0410	
58	.0420	
57	.0430	
56	.0465	
3/64	.0469	0-80
55	.0520	
54	.0550	1-56
53	.0595	1-64, 72
1/16	.0625	
52	.0635	
51	.0670	
50	.0700	2-56, 64
49	.0730	
48	.0760	
5/64	.0781	
47	.0785	3-48
46	.0810	
45	.0820	3-56,4-32
44	.0860	4-36
43	.0890	4-40
42	.0935	4-48
3/32	.0937	
41	.0960	
40	.0980	
39	.0995	
38	.1015	5-40
37	.1040	5-44
36	.1065	6-32
7/64	.1093	
35	.1100	
34	.1110	6-36
33	.1130	6-40
32	.1160	
31	.1200	
1/8	.1250	
30	.1285	
29	.1360	8-32, 36
28	.1405	8-40
9/64	.1406	
27	.1440	
26	.1470	
25	.1495	10-24
24	.1520	
23	.1540	
5/32	.1562	
22	.1570	10-30
21	.1590	10-32
20	.1610	
19	.1660	
18	.1695	
11/64	.1719	
17	.1730	
16	.1770	12-24
15	.1800	
14	.1820	12-28
13	.1850	12-32
3/16	.1875	
12	.1890	
11	.1910	
10	.1935	
9	.1960	
8	.1990	
7	.2010	1/4-20
13/64	.2031	
6	.2040	
5	.2055	
4	.2090	
3	.2130	1/4-28
7/32	.2187	
2	.2210	
1	.2280	
A	.2340	
15/64	.2344	
B	.2380	
C	.2420	
D	.2460	
E, 1/4	.2500	
F	.2570	5/16-18
G	.2610	
17/64	.2656	
H	.2660	
I	.2720	5/16-24
J	.2770	
K	.2810	
9/32	.2812	
L	.2900	
M	.2950	
19/64	.2968	
N	.3020	
5/16	.3125	3/8-16
O	.3160	
P	.3230	
21/64	.3281	
Q	.3320	3/8-24
R	.3390	
11/32	.3437	
S	.3480	
T	.3580	
23/64	.3594	
U	.3680	7/16-14
3/8	.3750	
V	.3770	
W	.3860	
25/64	.3906	7/16-20
X	.3970	
Y	.4040	
13/32	.4062	
Z	.4130	
27/64	.4219	1/2-13
7/16	.4375	
29/64	.4531	1/2-20
15/32	.4687	
31/64	.4844	9/16-12
1/2	.5000	
33/64	.5156	9/16-18
17/32	.5312	5/8-11
35/64	.5469	
9/16	.5625	
37/64	.5781	5/8-18
19/32	.5937	11/16-11
39/64	.6094	
5/8	.6250	11/16-16
41/64	.6406	
21/32	.6562	3/4-10
43/64	.6719	
11/16	.6875	3/4-16
45/64	.7031	
23/32	.7187	
47/64	.7344	
3/4	.7500	
49/64	.7656	7/8-9
25/32	.7812	
51/64	.7969	
13/16	.8125	7/8-14
53/64	.8281	
27/32	.8437	
55/64	.8594	
7/8	.8750	1-8
57/64	.8906	
29/32	.9062	
59/64	.9219	
15/16	.9375	1-12,14
61/64	.9531	
31/32	.9687	
63/64	.9844	
1	1.000	

PIPE THREAD SIZES

THREAD	DRILL	THREAD	DRILL
1/8-27	R	1 1/2-11 1/2	1 47/64
1/4-18	7/16	2-11 1/2	2 7/32
3/8-18	37/64	2 1/2-8	2 5/8
1/2-14	23/32	3 8	3 1/4
3/4-14	59/64	3 1/2-8	3 3/4
1-11 1/2	1 5/32	4-8	4 1/4
1 1/4-11 1/2	1 1/2		

150-59

Decimal Equivalents and Drill Tap Sizes